CITY AND COUNTY OF HONOLULU
REVISED ORDINANCE CHAPTER 32,
HONOLULU COUNTY CODE 1990, AS AMENDED

To the best of my knowledge, this projects design substantially conforms to the Building Energy Conservation Code for:

_______ Building Component Systems
_______ Electrical Component Systems
___X___ Mechanical Component Systems

Signature: ____________ Date: 3/19/2019
Name: ANDREW S. CROSSLAND
Title: OWNER, PRINCIPAL MECHANICAL ENGINEER
License No: 16028–M

HVAC LEGEND

SYMBOL	ABBREV.	DESCRIPTION
HVAC AIR DISTRIBUTION		
		DUCT MITERED ELBOW WITH TURNING VANES
	AxB	RECTANGULAR DUCT WIDTH (A) AND HEIGHT (B)
	Aø	ROUND DUCT DIAMETER (A)
	FC	FLEXIBLE DUCT CONNECTION
	FD	FIRE DAMPER
	SMD	SMOKE DAMPER
	FSD	FIRE/SMOKE DAMPER
		MOTOR OPERATED DAMPER
	VD	MANUAL VOLUME DAMPER
	ODB	OPPOSED BLADE DAMPER
	BDD	GRAVITY BACKDRAFT DAMPER
SD	SD	DUCT SMOKE DETECTOR
SP	SP	DUCT STATIC PRESSURE SENSOR
	SA / OA	SUPPLY AIR OR OUTSIDE AIR DUCT DOWN
	RA	RETURN AIR DUCT DOWN
	EXH	EXHAUST AIR DUCT DOWN
		ROUND DUCT DOWN
	SA / OA	SUPPLY AIR OR OUTSIDE AIR DUCT UP
	RA	RETURN AIR DUCT UP
	EXH	EXHAUST AIR DUCT UP
		ROUND DUCT UP
R		DUCT RISE IN DIRECTION OF AIRFLOW
D		DUCT DROP IN DIRECTION OF AIRFLOW
		RECTANGULAR DUCT TRANSITION
		RECTANGULAR TO ROUND DUCT TRANSITION
		INTERNALLY LINED DUCTWORK
AP	AP	DUCT ACCESS PANEL
		DUCT RADIUS ELBOW
		SUPPLY / RETURN / EXHAUST AIR DEVICE
		SUPPLY GRILLE / RETURN OR EXHAUST GRILLE
		FLEXIBLE DUCT
HVAC CONTROLS		
T		THERMOSTAT OR TEMPERATURE SENSOR
H		HUMIDISTAT OR HUMIDITY SENSOR
C		CARBON DIOXIDE SENSOR
CO		CARBON MONOXIDE SENSOR
HVAC PIPING		
——CHS——	CHS	CHILLED WATER SUPPLY PIPE
——CHR——	CHR	CHILLED WATER RETURN PIPE
——CWS——	CWS	CONDENSER WATER SUPPLY PIPE
——CWR——	CWR	CONDENSER WATER RETURN PIPE
——RL——	RL	REFRIGERANT LIQUID PIPE
——RG——	RG	REFRIGERANT GAS PIPE
——REF——	REF	REFRIGERANT LIQUID & GAS PIPES
——CD——	CD	CONDENSATE DRAIN PIPE
GENERAL PIPING SYMBOLS AND VALVES		
		PIPE BRANCH TAKE–OFF FROM BOTTOM
		PIPE BRANCH TAKE–OFF FROM TOP
		PIPE DROP
		PIPE RISE
		DIRECTION OF FLOW
	SOV	SHUTOFF VALVE (SEE SPECS FOR TYPE)
		BALANCING VALVE
		2–WAY CONTROL VALVE
		MOTOR OPERATED VALVE
	PRV	PRESSURE REDUCING VALVE
		CHECK VALVE
		WYE STRAINER WITH DRAIN VALVE
		PIPE UNION
		PIPE FLANGE
		FLEXIBLE PIPE CONNECTION
	DCBP	DOUBLE CHECK BACKFLOW PREVENTER
		PRESSURE RELIEF VALVE
	T&P	TEMPERATURE AND PRESSURE RELIEF VALVE
	PT	PRESSURE AND TEMPERATURE TEST PORT
		TEMPERATURE GAUGE AND PRESSURE GAUGE
TAGS		
A / B		EQUIPMENT TAG A – EQUIPMENT TYPE B – NUMBER
A B / C D		AIR DEVICE TAG A – MARK B – NECK SIZE C – SUPPLY/RETURN/EXHAUST/TRANSFER D – AIRFLOW (CFM)
A		KEYNOTE TAG KEYNOTE NUMBER "A"
A / B		DETAIL TAG DETAIL "A" ON SHEET "B"

GENERAL NOTES

CODES, STANDARDS, AND AUTHORITIES:

A. ALL WORK SHALL COMPLY WITH ALL APPLICABLE STATE, COUNTY, AND MUNICIPAL CODES, AND ALL LOCAL CODES AND ORDINANCES. WHERE PROVISIONS OF PERTINENT CODES AND STANDARDS CONFLICT WITH THE CONTRACT DOCUMENTS, THE MORE STRINGENT PROVISIONS SHALL GOVERN.
B. BEFORE COMMENCING WORK, THE CONTRACTOR SHALL FILE ALL REQUIRED CERTIFICATES OF INSURANCE WITH THE BUILDING DEPARTMENT, OBTAIN ALL REQUIRED PERMITS, AND PAY ALL FEES REQUIRED BY GOVERNING LOCAL AGENCIES AND AUTHORITIES HAVING JURISDICTION.
C. THE GENERAL CONTRACTOR SHALL BE RESPONSIBLE FOR COORDINATING ALL APPLICABLE CODE INSPECTIONS AS REQUIRED BY THE AUTHORITIES HAVING JURISDICTION TO OBTAIN THE BUILDING PERMIT.
D. ALL CONTRACTORS SHALL BE QUALIFIED AND LICENSED FOR WORK THEY PERFORM.

QUALITY ASSURANCE AND GUARANTEE:

A. ALL INSTALLED PRODUCTS, MATERIALS AND EQUIPMENT SHALL BE NEW AND IN PERFECT CONDITION. WORKMANSHIP SHALL BE THE BEST STANDARD PRACTICE OF TRADE.
B. THE CONTRACTOR SHALL FURNISH WRITTEN, CERTIFIED GUARANTEE, IN ACCEPTABLE FORM, TO THE OWNER AGAINST DEFECTIVE WORKMANSHIP, PRODUCTS, MATERIALS, AND EQUIPMENT. FURTHER GUARANTEE TO ADJUST ENTIRE SYSTEM, OR ANY PART THEREOF, AS REQUIRED FOR PERFECT OPERATION FOR A PERIOD OF ONE YEAR AFTER BENEFICIAL USE OR ACCEPTANCE OF OWNER, WHICHEVER IS FIRST. REPAIR, REPLACE, AND MAKE SATISFACTORILY OPERATIVE ALL DEFECTIVE ITEMS AND WORK HOLDING OWNER FREE FROM COST AND LIABILITY IN CONNECTION THEREWITH, FOR THE TERM OF THE GUARANTEE.

CONTRACTOR BID:

A. THE CONTRACTOR'S BID SHALL BE BASED ON ALL WORK SHOWN ON THE PLANS AND AS SPECIFIED IN THE CONTRACT DOCUMENTS. IT IS THE CONTRACTOR'S RESPONSIBILITY TO VISIT THE SITE AND BE FULLY FAMILIAR WITH FIELD CONDITIONS PRIOR TO SUBMITTING BID.
B. CONFLICTS AND/OR PROBLEMS SHALL BE REPORTED PRIOR TO BIDDING FOR RESOLUTION. FAILURE TO REPORT THESE CONFLICTS PLACES THE RESPONSIBILITY ON THE CONTRACTOR TO COMPLETE THE WORK AT THE REASONABLE DIRECTION OF OWNER AND CONSULTANTS, AT NO ADDITIONAL COST TO THE OWNER.

CONGRUENCE:

A. REFER TO DRAWINGS AND SPECIFICATIONS OF ALL TRADES FOR ADDITIONAL GENERAL NOTES, ABBREVIATIONS, AND SYMBOLS LEGENDS. ALL NOTES ARE TO BE REVIEWED AND APPLIED TO RELATED BUILDING COMPONENTS.
B. NOTES APPEAR ON VARIOUS SHEETS FOR DIFFERENT SYSTEMS, PRODUCTS, MATERIALS, AND EQUIPMENT. ALL SHEETS ARE TO BE REVIEWED AND NOTES ON ANY SHEET ARE TO BE APPLIED TO RELATED SYSTEMS, PRODUCTS, MATERIALS, AND EQUIPMENT DEPICTED ON OTHER DRAWINGS.

COORDINATION:

A. THE CONTRACTOR SHALL COORDINATE ALL WORK PROCEDURES AND NECESSARY SPECIAL INSPECTIONS WITH REQUIREMENTS OF LOCAL AUTHORITIES, THE OWNER, AND BUILDING MANAGEMENT.
B. THESE DRAWINGS ARE DIAGRAMMATIC AND ALL CONTRACTORS MUST CAREFULLY COORDINATE THEIR WORK WITH EACH OTHER, THE GENERAL CONTRACTOR, AND OTHER TRADES. PRIORITY SHALL BE GIVEN IN THE FOLLOWING ORDER: GRAVITY SLOPED PLUMBING PIPING; EQUIPMENT, DUCTWORK, AND CONDUIT; FORCED AND PRESSURE PIPING SUCH AS WATER AND FIRE SPRINKLER PIPING.
C. CAREFULLY CHECK SERVICE CLEARANCE REQUIREMENTS WITH OTHER TRADES TO ENSURE THAT ALL PRODUCTS, MATERIALS, AND EQUIPMENT CAN BE INSTALLED IN THE SPACES ALLOTTED THERETO.
D. TRANSMIT TO TRADES DOING WORK OF OTHER SECTIONS ALL INFORMATION REQUIRED FOR THE WORK TO BE PROVIDED UNDER THEIR RESPECTIVE SECTIONS IN AMPLE TIME FOR INSTALLATION.
E. WHEREVER ANY CONTRACTOR'S WORK INTERCONNECTS WITH THE WORK OF OTHER CONTRACTORS, THOSE CONTRACTORS SHALL COORDINATE THEIR WORK TO ENSURE THAT ALL CONTRACTORS HAVE THE INFORMATION NECESSARY TO PROPERLY INSTALL ALL CONNECTIONS.
F. WHILE THE DRAWINGS SHALL BE ADHERED TO AS CLOSELY AS POSSIBLE, THE CONTRACTOR MAY VARY THE RUNS OF PIPING, CONDUIT, AND DUCTWORK, AND MAY MAKE OFFSETS WHERE NECESSARY TO ACCOMMODATE CONDITIONS ARISING AT THE SITE. REASONABLE MODIFICATIONS TO SUIT JOB CONDITIONS SHALL NOT CONSTITUTE BASIS FOR REQUESTING OF ADDITIONAL FUNDS FROM THE OWNER.

SUBMITTALS AND SUBSTITUTIONS:

A. THE CONTRACTOR SHALL SUBMIT ELECTRONIC COPIES OF PRODUCT, MATERIAL, AND EQUIPMENT DATA, AND DIMENSIONED SHOP DRAWINGS FOR REVIEW AND APPROVAL BY THE OWNER, BUILDING MANAGEMENT, AND CROSSLAND ENGINEERING PRIOR TO COMMENCING ANY WORK. ALL WORK DONE PRIOR TO APPROVAL SHALL BE SUBJECT TO REPAIR OR REPLACEMENT AT NO COST TO OWNER. SHOP DRAWINGS SHALL BE COORDINATED WITH OTHER TRADES.
B. IF THE CONTRACTOR PROPOSES TO SUBSTITUTE FOR ANY PRODUCTS, MATERIALS, OR EQUIPMENT SPECIFIED IN THE CONTRACT DOCUMENTS, HE SHALL SUBMIT HIS REQUEST FOR CONSIDERATION OF THE OWNER AND CONSULTANTS PRIOR TO BID IN WRITING. SUCH APPROVAL SHALL NOT RELIEVE THE CONTRACTOR FROM COMPLYING WITH THE REQUIREMENTS OF THE DRAWINGS AND SPECIFICATIONS, AND THE CONTRACTOR SHALL BE RESPONSIBLE AT HIS OWN EXPENSE FOR ANY CHANGES RESULTING FROM HIS PROPOSED SUBSTITUTIONS WHICH AFFECT OTHER PARTS OF HIS OWN WORK OR THE WORK OF OTHER CONTRACTORS.

EXECUTION OF WORK:

A. THE CONTRACTOR SHALL BE RESPONSIBLE FOR THE SAFETY AND GOOD CONDITION OF ALL PRODUCTS, MATERIALS, AND EQUIPMENT OF THE ENTIRE INSTALLATION UNTIL FINAL ACCEPTANCE BY THE OWNER. HE SHALL ERECT AND MAINTAIN SUITABLE BARRIERS, PROTECTIVE DEVICES, LIGHTS OR WARNING SIGNS, WHERE REQUIRED, FOR THE PROTECTION OF THE PUBLIC AND EMPLOYEES IN THE BUILDING AND SHALL BE FULLY RESPONSIBLE FOR ANY LOSS OR INJURY TO PERSONS OR PROPERTIES RESULTING FROM HIS NEGLECT OF THESE PRECAUTIONS, HIS OWN CARELESSNESS, OR THE CARELESSNESS OF HIS EMPLOYEES.
B. MINOR DETAILS NOT USUALLY SHOWN OR SPECIFIED, BUT NECESSARY FOR PROPER CONSTRUCTION OF ANY PART OF THE WORK SHALL BE INCLUDED AS IF THEY WERE INDICATED IN THE CONTRACT DOCUMENTS.
C. THE CONTRACTOR SHALL DO ALL CUTTING, PATCHING, AND REPAIRING AS REQUIRED TO PERFORM ALL OF THE WORK INDICATED ON THE DRAWINGS, AND ALL OTHER RELATED WORK THAT MAY BE REQUIRED TO COMPLETE THE JOB.

DOCUMENT OWNERSHIP:

A. CROSSLAND ENGINEERING SHALL RETAIN TITLE, OWNERSHIP, AND COPYRIGHT OF THE MECHANICAL CONSTRUCTION DOCUMENTS AS INSTRUMENTS OF SERVICE.
B. THE GENERAL CONTRACTOR OR THEIR SUBCONTRACTORS SHALL NOT USE CROSSLAND ENGINEERING'S CONSTRUCTION DOCUMENTS TO SATISFY THEIR OBLIGATION TO PREPARE AND SUBMIT SHOP DRAWINGS OR RECORD DRAWINGS AS REQUIRED BY THE CONTRACT.

RECORD DRAWINGS:

A. THE CONTRACTOR SHALL MAINTAIN A SET OF CONTRACT DRAWINGS AT THE JOB SITE, MARKING THEM TO SHOW VARIATIONS BETWEEN THE CONSTRUCTION DOCUMENTS AND THE ACTUAL INSTALLATION.
B. THE CONTRACTOR SHALL PROVIDE OWNER WITH ACCURATE AND REPRODUCIBLE RECORD DRAWINGS OF THE INSTALLED WORK UPON COMPLETION OF WORK.
C. THE QUALITY OF THE RECORD DRAWINGS SHALL BE AS GOOD AS OR BETTER THAN THE CONTRACT DRAWINGS.

BUILDING CODES

2006 INTERNATIONAL BUILDING CODE W/ AMENDMENTS PER ROH CHAPTER 16
2006 INTERNATIONAL EXISTING BUILDING CODE W/ AMENDMENTS PER ROH CHAPTER 16
2008 NATIONAL ELECTRICAL CODE W/ AMENDMENTS PER ROH CHAPTER 17
2006 UNIFORM PLUMBING CODE W/ AMENDMENTS PER ROH CHAPTER 19
2012 NFPA 1: UNIFORM FIRE CODE W/ AMENDMENTS PER ROH CHAPTER 20
2006 INTERNATIONAL ENERGY CONSERVATION CODE W/ AMENDMENTS PER ROH CHAPTER 32

2004 ADAAG & 2010 ADA STANDARDS FOR ACCESSIBLE DESIGN
CONFORMANCE WITH THE DESIGN AND CONSTRUCTION REQUIREMENTS OF THE AMERICANS WITH DISABILITIES ACT ACCESSIBILITY GUIDELINES ADMINISTERED BY THE DEPARTMENT OF JUSTICE OR THE FAIR HOUSING ACT ACCESSIBILITY GUIDELINES ADMINISTERED BY THE DEPARTMENT OF HOUSING AND URBAN DEVELOPMENT SHALL BE EQUIVALENT TO MEETING THE ACCESSIBILITY OF THIS CODE.

HAWAII STATE DEPARTMENT OF HEALTH NOTES

THE AIR CONDITIONING AND VENTILATION SYSTEM FOR THIS PROJECT SHALL COMPLY WITH THE HAWAII STATE DEPARTMENT OF HEALTH REQUIREMENTS PER HAWAII ADMINISTRATIVE RULES, TITLE 11, DEPARTMENT OF HEALTH, CHAPTER 39, AIR CONDITIONING AND VENTILATING.

CROSSLAND ENGINEERING
Big Firm Results. Small Firm Service.
3371 Loulu Street, Honolulu, HI 96822
(808) 462-8484 | info@crosslandeng.com | www.crosslandeng.com

ENGINEER:
THIS WORK WAS PREPARED BY ME OR UNDER MY SUPERVISION AND CONSTRUCTION OF THIS PROJECT WILL BE UNDER MY OBSERVATION.

ANDREW S. CROSSLAND
LICENSED PROFESSIONAL ENGINEER
No. 16028–M
HAWAII U.S.A.

EXPIRES: 4/30/2020

DEVELOPER:
CALIFORNIA INVESTMENT REGIONAL CENTER, LLC

PROJECT OWNER:
HAWAII CITY PLAZA, LP

Hawaii City Plaza
Honolulu, Hawaii
710 Sheridan Street
TMK 2-3-014: Parcels 002, 004, & 011

PERMIT SET

DATE 2019 MARCH 19

PROJECT # 15028-02

SHEET TITLE
HVAC NOTES AND LEGEND

SHEET NO.
M-000

DEDICATED OUTDOOR AIR SYSTEM SCHEDULE

MARK	SERVICE	LOCATION	SUPPLY FAN				AIR FILTER			EVAPORATOR								HOT GAS REHEAT			COMPRESSOR				CONDENSER				ELECTRICAL								WEIGHT (LBS.)	DIMENSIONS (L" x W" x H")	BASIS-OF-DESIGN MANUFACTURER	BASIS-OF-DESIGN MODEL NO.	REMARKS
			TOTAL OUTSIDE AIR QUANTITY (CFM)	EXTERNAL FAN STATIC PRESSURE (IN. W.G.)	MOTOR SIZE (HP)	MOTOR STARTER TYPE; A: VARIABLE FREQUENCY DRIVE B: FULL-VOLTAGE NON-REVERSING	FILTER TYPE (MERV / THICKNESS)	INITIAL CLEAN FILTER PRESSURE DROP (IN. W.G.)	DIRTY FILTER PRESSURE DROP (IN. W.G.)	TOTAL COOLING CAPACITY (MBH)	SENSIBLE COOLING CAPACITY (MBH)	LATENT COOLING CAPACITY (MBH)	MAXIMUM COIL FACE VELOCITY (FPM)	E.A.T.		S.A.T. LEAVING COIL		TOTAL HEATING CAPACITY (MBH)	S.A.T LEAVING UNIT		NOMINAL TONS / STAGES OF CAPACITY	COMPRESSOR TYPE	REFRIGERANT TYPE	REFRIGERANT CHARGE (LBS.)	AMBIENT AIR TEMPERATURE (°F)	FANS				VOLTAGE	PHASE	HERTZ	MCA	MOP	FLA	SEER					
														DB (°F)	WB (°F)	DB (°F)	WB (°F)		DB (°F)	DP (°F)						DRIVE TYPE	VARIABLE SPEED (Y /N)	QUANTITY	MOTOR SIZE (HP, EACH)											
DOAS-1	TOWER	ROOF	8,600	1.2	7.5	A	13/4"	–	–	636	236	400	450	80.3	75.5	55	55	139	70	55	–	VARIABLE SPEED	–	–	95	DIRECT	Y	6	–	208	3	60	233	250	–	–	7,500	–	PETRA	PPH 50	SEE NOTES
DOAS-2	TOWER	ROOF	8,600	1.2	7.5	A	13/4"	–	–	636	236	400	450	80.3	75.5	55	55	139	70	55	–	VARIABLE SPEED	–	–	95	DIRECT	Y	6	–	208	3	60	233	250	–	–	7,500	–	PETRA	PPH 50	SEE NOTES

NOTES: 1. ALL UNITS SHALL HAVE SINGLE POINT POWER CONNECTION AND SHALL BE PROVIDED WITH APPROPRIATE STARTER AND FACTORY MOUNTED DISCONNECT. 2. UNIT CABINET SHALL BE DOUBLE-WALL FOAM INSULATED CONSTRUCTION WITH THERMAL BREAK AND STAINLESS STEEL FASTENERS AND HARDWARE. 3. UNIT CABINET SHALL HAVE CORROSION COATING WITH MINIMUM 5,000 HOUR SALT SPRAY RATING ON INTERIOR AND EXTERIOR. 4. UNIT SHALL HAVE FULL COVERAGE E-COAT CORROSION COATING ON EVAPORATOR COIL AND MODULATING HOT GAS REHEAT COIL WITH MINIMUM 5,000 HOUR SALT SPRAY RATING. 5. UNIT SHALL HAVE VARIABLE SPEED SUPPLY FAN AND CONDENSER FANS. LEAD COMPRESSOR SHALL ALSO BE VARIABLE SPEED. 6. UNIT SHALL HAVE UV-C LIGHT AT EVAPORATOR COIL. UV-C LIGHT SHALL BE INTERLOCKED WITH ACCESS DOOR AND WARNING SIGNAGE SHALL BE PROVIDED ON DOOR. 7. SUPPLY FAN AND CONDENSER FAN MOTORS SHALL BE NEMA PREMIUM EFFICIENCY TYPE PER CEE, UL LISTED. 8. PROVIDE SOUND INSULATION JACKETS ON COMPRESSORS. 9. EQUIPMENT WILL BE SPRING ISOLATED FROM THE ROOF STRUCTURE; SUPPLY FAN SHALL NOT BE SEPARATELY SPRING ISOLATED. 10. UNIT SHALL HAVE FACTORY STANDALONE CONTROLS WITH TOUCH SCREEN GRAPHIC USER INTERFACE. REFER TO SEQUENCES OF OPERATION FOR ADDITIONAL OPERATIONAL INFORMATION. 11. UNIT SHALL BE PROVIDED WITH 4" MERV-13 AIR FILTER. DIRTY AIR FILTER PRESSURE DROP SHALL BE INCLUDED IN MANUFACTURER INTERNAL STATIC PRESSURE CALCULATIONS. 12. CONTRACTOR SHALL CHANGE AIR FILTERS AFTER CONSTRUCTION AND PRIOR TO OCCUPANCY. 13. CONTRACTOR SHALL ENGAGE A FACTORY-AUTHORIZED TECHNICIAN TO PERFORM SYSTEM STARTUP, COMMISSIONING, AND PERFORMANCE TESTING. TECHNICIAN SHALL PROVIDE A REPORT TO ENGINEER FOR REVIEW AND APPROVAL.

VARIABLE REFRIGERANT FLOW AIR CONDITIONING SYSTEM SCHEDULE

INDOOR FAN COIL UNITS

MARK	LOCATION	ASSOCIATED ACCU	ACCESS PANEL TYPE	SUPPLY FAN			EVAPORATOR COIL			ELECTRICAL				BASIS-OF-DESIGN MANUFACTURER	BASIS-OF-DESIGN MODEL NO.
				SUPPLY CFM	OUTDOOR AIR CFM	E.S.P. (IN. WG)	TOTAL CAPACITY (MBH)	SENSIBLE CAPACITY (MBH)	ENTERING AIR (DB/WB)	INPUT POWER (W)	SUPPLY (V/PH)	MCA	MFA		
FCU-A1.1	UNIT A.1	ACCU-A1	AP-2	440	0	0.2	9.7	8.8	75/63	185	208/1	1.3	15	DAIKIN	FXDQ18MVJU
FCU-A1.2			AP-2	440	0	0.2	10.2	9.7	75/63	185	208/1	1.3	15	DAIKIN	FXDQ18MVJU
FCU-A2.1	UNIT A.2	ACCU-A2	AP-2	440	0	0.2	9.7	8.8	75/63	185	208/1	1.3	15	DAIKIN	FXDQ18MVJU
FCU-A2.2			AP-2	440	0	0.2	10.0	9.5	75/63	185	208/1	1.3	15	DAIKIN	FXDQ18MVJU
FCU-A3.1	UNIT A.3	ACCU-A3	AP-2	440	0	0.2	9.7	8.8	75/63	185	208/1	1.3	15	DAIKIN	FXDQ18MVJU
FCU-A3.2			AP-2	440	0	0.2	10.0	9.5	75/63	185	208/1	1.3	15	DAIKIN	FXDQ18MVJU
FCU-B.1	UNIT B	ACCU-B	AP-2	440	0	0.2	11.3	10.1	75/63	185	208/1	1.3	15	DAIKIN	FXDQ18MVJU
FCU-B.2			AP-4	440	0	0.2	11.1	10.4	75/63	185	208/1	1.3	15	DAIKIN	FXDQ18MVJU
FCU-B.3			AP-2	440	0	0.2	8.5	8.1	75/63	185	208/1	1.3	15	DAIKIN	FXDQ18MVJU
FCU-C.1	UNIT C	ACCU-C	AP-3	580	0	0.2	15.3	14.1	75/63	192	208/1	1.4	15	DAIKIN	FXDQ24MVJU
FCU-C.2			AP-4	440	0	0.2	8.8	8.3	75/63	185	208/1	1.3	15	DAIKIN	FXDQ18MVJU
FCU-C.3			AP-2	440	0	0.2	9.5	9.1	75/63	185	208/1	1.3	15	DAIKIN	FXDQ18MVJU
FCU-D.1	UNIT D	ACCU-D	AP-2	440	0	0.2	10.5	9.2	75/63	185	208/1	1.3	15	DAIKIN	FXDQ18MVJU
FCU-D.2			AP-4	440	0	0.2	8.0	7.5	75/63	185	208/1	1.3	15	DAIKIN	FXDQ18MVJU
FCU-D.3			AP-1	280	0	0.2	5.2	5.0	75/63	92	208/1	0.9	15	DAIKIN	FXDQ07MVJU
FCU-E.1	UNIT E	ACCU-E	AP-2	440	0	0.2	12.0	10.7	75/63	185	208/1	1.3	15	DAIKIN	FXDQ18MVJU
FCU-E.2			AP-4	440	0	0.2	12.1	11.4	75/63	185	208/1	1.3	15	DAIKIN	FXDQ18MVJU
FCU-E.3			AP-1	280	0	0.2	5.8	5.4	75/63	92	208/1	0.9	15	DAIKIN	FXDQ07MVJU
FCU-G.1	UNIT G	ACCU-G	AP-2	440	0	0.2	9.4	8.3	75/63	185	208/1	1.3	15	DAIKIN	FXDQ18MVJU
FCU-G.2			AP-2	440	0	0.2	10.6	10.0	75/63	185	208/1	1.3	15	DAIKIN	FXDQ18MVJU
FCU-H.1	UNIT H	ACCU-H	AP-3	580	0	0.2	20.6	19.3	75/63	192	208/1	1.4	15	DAIKIN	FXDQ24MVJU
FCU-H.2			AP-2	440	0	0.2	10.8	10.2	75/63	185	208/1	1.3	15	DAIKIN	FXDQ18MVJU
FCU-H.3			AP-1	280	0	0.2	6.2	5.8	75/63	92	208/1	0.9	15	DAIKIN	FXDQ07MVJU
FCU-1.1	FLR 1 LOBBY	ACCU-1.1	AP-8	240	40	0.3	3.9	3.5	75/63	–	–	–	–	DAIKIN	FDMQ09RVJU
FCU-1.2	COMMUNITY ROOM	ACCU-1.2	AP-5	580	70	0.2	15.0	13.9	75/63	192	208/1	1.4	15	DAIKIN	FXDQ24MVJU
FCU-1.3	ELEV 4 MACH RM		–	260	0	0.2	4.5	4.5	75/63	20	208/1	0.4	15	DAIKIN	FXAQ07PVJU
FCU-2.1	FLR 2 LOBBY	ACCU-2.1	AP-5	690	90	0.4	15.8	14.8	75/63	229	208/1	1.8	15	DAIKIN	FBQ24PVJU
FCU-3.1	FLR 3 LOBBY	ACCU-3.1	AP-1	240	0	0.2	1.5	1.3	75/63	–	–	–	–	DAIKIN	FDXS09LVJU
FCU-4.1	FLR 4 LOBBY	ACCU-4.1	AP-1	240	0	0.2	1.5	1.3	75/63	–	–	–	–	DAIKIN	FDXS09LVJU
FCU-5.1	FLR 5 LOBBY	ACCU-5.1	AP-1	240	0	0.2	1.5	1.3	75/63	–	–	–	–	DAIKIN	FDXS09LVJU
FCU-6.1	GAME RM	ACCU-6	AP-5	560	0	0.4	9.7	8.7	75/63	199	208/1	1.5	15	DAIKIN	FXMQ15PBVJU
FCU-6.2	MULTI FUNC		AP-6	1,100	0	0.4	21.2	18.3	75/63	363	208/1	2.8	15	DAIKIN	FXMQ30PBVJU
FCU-6.3	THEATRE		AP-5	640	0	0.4	12.8	12.1	75/63	214	208/1	1.6	15	DAIKIN	FXMQ18PBVJU
FCU-6.4	MGR OFFICE		AP-5	560	0	0.4	10.3	9.8	75/63	199	208/1	1.5	15	DAIKIN	FXMQ15PBVJU
FCU-6.5	GYM		AP-6	1,380	0	0.4	37.2	31.2	75/63	460	208/1	3.4	15	DAIKIN	FXMQ48PBVJU
FCU-6.6	KITCHEN		AP-7	2,050	0	0.4	45.2	42.2	75/63	1,490	208/1	9.5	15	DAIKIN	FXMQ72MVJU
FCU-R.1	ELEV 1,2,3 MACH RM	ACCU-R.1	–	710	0	0.2	17.4	17.4	75/63	–	–	–	–	DAIKIN	FTKN24NMVJU

NOTES: FCU
1. PROVIDE EACH FCU WITH DISCONNECT SWITCH. 2. FCU SHALL HAVE BRC1E73 STAND ALONE WALL-MOUNTED PROGRAMMABLE CONTROLLER WITH W/ LCD DIGITAL DISPLAY. COORDINATE EXACT LOCATION OF THERMOSTATS WITH DEVELOPER AND ARCHITECT. 3. WHERE AVAILABLE, ALL FAN COIL UNITS SHALL BE PROVIDED WITH OPTIONAL INTEGRAL CONDENSATE PUMP FROM THE FACTORY. 4. INSTALL UNIT PER MANUFACTURER REQUIREMENTS AND ENSURE UNOBSTRUCTED SERVICE CLEARANCE IS PROVIDED. 5. CONTRACTOR SHALL CHANGE AIR FILTERS AFTER CONSTRUCTION AND PRIOR TO OCCUPANCY.

OUTDOOR AIR-COOLED CONDENSING UNITS

MARK	LOCATION	NOMINAL COOLING CAPACITY (MBH)	REFRIGERANT			ELECTRICAL					DIMENSIONS (W"xD"xH")	WEIGHT (LBS.)	BASIS-OF-DESIGN MANUFACTURER	BASIS-OF-DESIGN MODEL NO.
			TYPE	UNIT CHARGE (LBS.)	EXTERNAL CHARGE (LBS.)	SUPPLY (V/PH)	MCA	MFA	MSC	SEER				
ACCU-A1	UNIT A1	36	R-410A	6.4	–	208/1	16.5	25	–	15.5	37x13x39	172	DAIKIN	RXTQ36TAVJU
ACCU-A2	UNIT A2	36	R-410A	6.4	–	208/1	16.5	25	–	15.5	37x13x39	172	DAIKIN	RXTQ36TAVJU
ACCU-A3	UNIT A3	36	R-410A	6.4	–	208/1	16.5	25	–	15.5	37x13x39	172	DAIKIN	RXTQ36TAVJU
ACCU-B	UNIT B	48	R-410A	7.5	–	208/1	29.1	35	–	16.0	37x13x39	176	DAIKIN	RXTQ48TAVJU
ACCU-C	UNIT C	48	R-410A	7.5	–	208/1	29.1	35	–	16.0	37x13x39	176	DAIKIN	RXTQ48TAVJU
ACCU-D	UNIT D	36	R-410A	6.4	–	208/1	16.5	25	–	15.5	37x13x39	172	DAIKIN	RXTQ36TAVJU
ACCU-E	UNIT E	36	R-410A	6.4	–	208/1	16.5	25	–	15.5	37x13x39	172	DAIKIN	RXTQ36TAVJU
ACCU-G	UNIT G	36	R-410A	6.4	–	208/1	16.5	25	–	15.5	37x13x39	172	DAIKIN	RXTQ36TAVJU
ACCU-H	UNIT H	48	R-410A	7.5	–	208/1	29.1	35	–	16.0	37x13x39	176	DAIKIN	RXTQ48TAVJU
ACCU-1.1	FLR 1 LDNG	9	R-410A	2.1	–	208/1	9.0	15	–	17.8	27x12x22	60	DAIKIN	RX09RMVJU
ACCU-1.2	FLR 1 OUTSIDE	36	R-410A	6.4	–	208/1	16.5	25	–	15.5	37x13x39	172	DAIKIN	RXTQ36TAVJU
ACCU-2.1	FLR 2 PRKG	24	R-410A	5.1	–	208/1	16.5	20	–	16.5	36x13x30	150	DAIKIN	RZR24PVJU8
ACCU-3.1	FLR 3 PRKG	9	R-410A	2.4	–	208/1	8.0	15	–	15.1	30x11x22	75	DAIKIN	RXS09LVJU
ACCU-4.1	FLR 4 PRKG	9	R-410A	2.4	–	208/1	8.0	15	–	15.1	30x11x22	75	DAIKIN	RXS09LVJU
ACCU-5.1	FLR 5 PRKG	9	R-410A	2.4	–	208/1	8.0	15	–	15.1	30x11x22	75	DAIKIN	RXS09LVJU
ACCU-6.1	6TH FLOOR	168	R-410A	17.2	–	208/3	55.1	60	–	19.8	49x30x67	695	DAIKIN	RXYQ168TTJU
ACCU-R.1	ROOF	24	R-410A	2.5	–	208/1	18.3	20	–	15	34x13x29	100	DAIKIN	RKN24NMVJU

NOTES: ACCU
1. PROVIDE EACH ACCU MODULE WITH DISCONNECT SWITCH. 2. CONTRACTOR SHALL DETERMINE EXACT REFRIGERANT PIPE SIZES WITH MANUFACTURER WHEN EXACT PIPE ROUTING IS DEFINED IN SHOP DRAWINGS. 3. PROVIDE CORROSION PROTECTION EQUIVALENT TO PSX-700 5500 HOUR SALT SPRAY TEST ON UNIT CABINET AND BLYGOLD 4000 HOUR SALT SPRAY TEST ON CONDENSER COIL. 4. INSTALL UNIT PER MANUFACTURER REQUIREMENTS AND ENSURE UNOBSTRUCTED SERVICE CLEARANCE IS PROVIDED.

CROSSLAND ENGINEERING
Big Firm Results. Small Firm Service.

ENGINEER:
THIS WORK WAS PREPARED BY ME OR UNDER MY SUPERVISION AND CONSTRUCTION OF THIS PROJECT WILL BE UNDER MY OBSERVATION.

ANDREW S. CROSSLAND
LICENSED PROFESSIONAL ENGINEER
No. 16028-M
HAWAII U.S.A.

EXPIRES: 4/30/2020

DEVELOPER:
CALIFORNIA INVESTMENT REGIONAL CENTER, LLC

PROJECT OWNER:
HAWAII CITY PLAZA, LP

Hawaii City Plaza
Honolulu, Hawaii
710 Sheridan Street
TMK 2-3-014: Parcels 002, 004, & 011

PERMIT SET

DATE 2019 MARCH 19

PROJECT # 15028-02

SHEET TITLE
HVAC SCHEDULES

SHEET NO.
M-001

EXHAUST FAN SCHEDULE

MARK	SERVICE	LOCATION	CONTROLLED BY	CONFIGURATION: FAN TYPE	CONFIGURATION: DISCHARGE DIRECTION	FAN DATA: AIR QUANTITY (CFM)	FAN DATA: EXTERNAL STATIC PRESSURE (IN. W.G.)	FAN DATA: FAN SPEED (RPM)	MOTOR DATA: MOTOR OPERATING POWER (BHP)	MOTOR DATA: MOTOR SIZE (HP)	MOTOR DATA: MOTOR WATTS (W)	MOTOR DATA: MAXIMUM MOTOR SPEED (RPM)	MOTOR DATA: DRIVE TYPE	MOTOR DATA: MOTOR SPEED CONTROLLER TYPE	ELECTRICAL: VOLTAGE	ELECTRICAL: PHASE	ELECTRICAL: HERTZ	INLET SONES	WEIGHT (LBS.)	DIMENSIONS (L" x W" x H" OR DIA.)	BASIS-OF-DESIGN MANUFACTURER	BASIS-OF-DESIGN MODEL NO.	REMARKS
EF-1.1	TOILET EXHAUST	SERVICE CORRIDOR	LIGHT SWITCH	CEILING	HORIZONTAL	100	0.3	–	–	–	12	–	DIRECT	ECM	120	1	60	1.5	15	–	GREENHECK	SP-A90-130-VG	SEE NOTES
EF-1.2	TOILET EXHAUST	COMMERCIAL SPACE C	LIGHT SWITCH	CEILING	HORIZONTAL	50	0.3	–	–	–	12	–	DIRECT	ECM	120	1	60	1.0	15	–	GREENHECK	SP-A50-90-VG	SEE NOTES
EF-6.1	TOILET EXHAUST	6TH FLOOR BATHROOMS	LIGHT SWITCH	CEILING	HORIZONTAL	100	0.3	–	–	–	12	–	DIRECT	ECM	120	1	60	1.5	15	–	GREENHECK	SP-A90-130-VG	SEE NOTES
EF-6.2	CUSTODIAN EXHAUST	CUSTODIAN ROOM	24/7	INLINE	HORIZONTAL	125	0.3	–	0.03	1/10	–	–	DIRECT	ECM	120	1	60	4.1	45	–	GREENHECK	SQ-75-VG	SEE NOTES
EF-6.3	POOL EQUIP	POOL EQUIP RM	24/7	INLINE	HORIZONTAL	300	0.3	–	0.04	1/10	–	–	DIRECT	ECM	120	1	60	5.5	60	–	GREENHECK	SQ-90-VG	SEE NOTES
EF-T	TOILET EXHAUST	RESIDENTIAL BATHROOMS	LIGHT SWITCH	CEILING	HORIZONTAL	50	0.3	–	–	–	12	–	DIRECT	ECM	120	1	60	1.0	15	–	GREENHECK	SP-A50-90-VG	SEE NOTES
EF-R.1	TRASH CHUTE	ROOF	24/7	CENTRIFUGAL UTILITY SET	VERTICAL	525	0.5	–	0.11	1/4	–	–	DIRECT	ECM	208	1	60	8.9	80	–	GREENHECK	SWD-8-VG	SEE NOTES
EF-T.1	TOILET EXHAUST	ROOF	CONSTANT PRESSURE	CENTRIFUGAL UTILITY SET	VERTICAL	500	0.5	–	0.10	1/4	–	–	DIRECT	ECM	208	1	60	8.7	80	–	GREENHECK	SWD-8-VG	SEE NOTES
EF-T.2	TOILET EXHAUST	ROOF	CONSTANT PRESSURE	CENTRIFUGAL UTILITY SET	VERTICAL	850	0.6	–	0.15	1/4	–	–	DIRECT	ECM	208	1	60	10.3	80	–	GREENHECK	SWD-10-VG	SEE NOTES
EF-T.3	TOILET EXHAUST	ROOF	CONSTANT PRESSURE	CENTRIFUGAL UTILITY SET	VERTICAL	550	0.5	–	0.12	1/4	–	–	DIRECT	ECM	208	1	60	9.3	80	–	GREENHECK	SWD-8-VG	SEE NOTES
EF-T.4	TOILET EXHAUST	ROOF	CONSTANT PRESSURE	CENTRIFUGAL UTILITY SET	VERTICAL	800	0.6	–	0.14	1/4	–	–	DIRECT	ECM	208	1	60	10.0	80	–	GREENHECK	SWD-10-VG	SEE NOTES
EF-D.1	DRYER EXHAUST	ROOF	CONSTANT PRESSURE	CENTRIFUGAL UTILITY SET	VERTICAL	2,250	0.6	–	–	3/4	–	–	DIRECT	ECM	208	1	60	8.1	190	–	GREENHECK	SWD-18-VG	SEE NOTES
EF-D.2	DRYER EXHAUST	ROOF	CONSTANT PRESSURE	CENTRIFUGAL UTILITY SET	VERTICAL	2,475	0.6	–	–	1.0	–	–	DIRECT	ECM	208	1	60	9.1	190	–	GREENHECK	SWD-18-VG	SEE NOTES
EF-D.3	DRYER EXHAUST	ROOF	CONSTANT PRESSURE	CENTRIFUGAL UTILITY SET	VERTICAL	3,600	0.7	–	–	2.0	–	–	DIRECT	ECM	208	1	60	15.2	190	–	GREENHECK	SWD-18-VG	SEE NOTES
EF-K.1	KITCHEN EXHAUST	ROOF	CONSTANT PRESSURE	CENTRIFUGAL UTILITY SET	VERTICAL	3,000	0.6	–	–	2.0	–	–	DIRECT	ECM	208	1	60	11.7	190	–	GREENHECK	SWD-18-VG	SEE NOTES
EF-K.2	KITCHEN EXHAUST	ROOF	CONSTANT PRESSURE	CENTRIFUGAL UTILITY SET	VERTICAL	3,300	0.6	–	–	2.0	–	–	DIRECT	ECM	208	1	60	13.4	190	–	GREENHECK	SWD-18-VG	SEE NOTES
EF-K.3	KITCHEN EXHAUST	ROOF	CONSTANT PRESSURE	CENTRIFUGAL UTILITY SET	VERTICAL	4,500	0.7	–	–	2.0	–	–	DIRECT	ECM	208	1	60	19.6	190	–	GREENHECK	SWD-18-VG	SEE NOTES

NOTES: ALL — 1. ALL FANS SHALL HAVE SINGLE POINT POWER CONNECTION AND SHALL BE PROVIDED WITH APPROPRIATE STARTER AND FACTORY MOUNTED DISCONNECT. 2. FAN SHALL BE INSTALLED WITH STAINLESS STEEL FASTENERS AND HARDWARE. 3. FAN MOTOR SHALL BE UL LISTED. 4. CONTRACTOR SHALL ENSURE THAT SUFFICIENT CLEARANCE SPACE IS PROVIDED TO PROPERLY ACCESS THE FAN FOR SERVICE AND MAINTENANCE PER MANUFACTURER REQUIREMENTS.

NOTES: EF-1.1,2 — 1. FAN HOUSING SHALL BE GALVANIZED STEEL CONSTRUCTION 2. FAN MOTOR CONTROLLER SHALL BE CAPABLE OF FAN SPEED MODULATION VIA DIAL ON MOTOR FOR AIRFLOW BALANCING. 3. FAN SHALL BE INTERLOCKED WITH THE LIGHTSWITCH IN THE ROOM BEING SERVED BY THE FAN. 4. FAN SHALL BE PROVIDED WITH FACTORY SUPPLIED VIBRATION ISOLATION KIT FOR HANGER RODS AND WC-6 WALL CAP WITH INTEGRAL BIRDSCREEN AND BACKDRAFT DAMPER.

NOTES: EF-6.1 — 1. FAN HOUSING SHALL BE GALVANIZED STEEL CONSTRUCTION 2. FAN MOTOR CONTROLLER SHALL BE CAPABLE OF FAN SPEED MODULATION VIA DIAL ON MOTOR FOR AIRFLOW BALANCING. 3. FAN SHALL BE INTERLOCKED WITH THE LIGHTSWITCH IN THE ROOM BEING SERVED BY THE FAN. 4. FAN SHALL BE PROVIDED WITH FACTORY SUPPLIED VIBRATION ISOLATION KIT FOR HANGER RODS AND DUCT MOUNTED OR INTEGRAL BACKDRAFT DAMPER.

NOTES: EF-6.2,3 — 1. FAN HOUSING SHALL BE GALVANIZED STEEL CONSTRUCTION 2. FAN MOTOR CONTROLLER SHALL BE CAPABLE OF FAN SPEED MODULATION VIA DIAL ON MOTOR FOR AIRFLOW BALANCING. 3. FAN SHALL OPERATE 24/7, CONTINUOUSLY. 4. FAN SHALL BE PROVIDED WITH FACTORY SUPPLIED SPRING VIBRATION ISOLATORS FOR HANGER RODS, INLET GUARD, AND DUCT MOUNTED OR INTEGRAL BACKDRAFT DAMPER. 5. FAN SELECTION SHALL ACCOUNT FOR STATIC PRESSURE CORRECTIONS DUE TO FREE AIR INLET, DUCTED OUTLET, AND INLET GUARD.

NOTES: EF-T — 1. FAN HOUSING SHALL BE GALVANIZED STEEL CONSTRUCTION 2. FAN MOTOR CONTROLLER SHALL BE CAPABLE OF FAN SPEED MODULATION VIA DIAL ON MOTOR FOR AIRFLOW BALANCING. 3. FAN SHALL BE INTERLOCKED WITH THE LIGHTSWITCH IN THE ROOM BEING SERVED BY THE FAN. 4. FAN SHALL BE PROVIDED WITH FACTORY SUPPLIED VIBRATION ISOLATION KIT FOR HANGER RODS AND DUCT MOUNTED OR INTEGRAL BACKDRAFT DAMPER.

NOTES: EF-R.1 — 1. FAN HOUSING SHALL BE GALVANIZED STEEL CONSTRUCTION WITH FULL COVERAGE FACTORY APPLIED HI-PRO POLYESTER POWDER COATING FOR CORROSION PROTECTION. INSTALL FAN WITH WITH STAINLESS STEEL FASTENERS AND HARDWARE. 2. FAN SHALL BE PROVIDED WITH CORROSION COATED WEATHER HOOD AND BIRDSCREEN OUTLET GUARD. 3. PROVIDE FAN WITH ALUMINUM SCROLL, INLET CONE, AND WHEEL. 4. FAN SHALL BE PROVIDED WITH INTEGRAL NEMA 4X DISCONNECT. 5. FAN MOTOR CONTROLLER SHALL BE CAPABLE OF FAN SPEED MODULATION VIA DIAL ON MOTOR FOR AIRFLOW BALANCING. 6. FAN MOTOR SHALL BE UL LISTED. 7. FAN SHALL BE PROVIDED WITH SHAFT SEAL AND INLET FLANGE. 8. FAN SELECTION SHALL ACCOUNT FOR STATIC PRESSURE CORRECTIONS DUE TO DUCTED INLET, FREE DISCHARGE OUTLET, AND OUTLET GUARD. 9. FAN SHALL BE PROVIDED AND INSTALLED WITH WITH FACTORY SUPPLIED MOUNTING RAILS AND SPRING BASE ISOLATORS. 10. FAN SHALL BE SUPPLIED WITH BOLTED ACCESS DOOR. CONTRACTOR SHALL ENSURE THAT SUFFICIENT CLEARANCE SPACE IS PROVIDED TO PROPERLY ACCESS THE FAN FOR SERVICE AND MAINTENANCE PER MANUFACTURER REQUIREMENTS. 11. STRUCTURAL SUPPORTS AND SPRING ISOLATORS SHALL BE CORROSION COATED TO MATCH FAN HOUSING SALT SPRAY RATING PERFORMANCE.

NOTES: EF-T.X, EF-D.X, EF-K.X — 1. FAN HOUSING SHALL BE GALVANIZED STEEL CONSTRUCTION WITH FULL COVERAGE FACTORY APPLIED HI-PRO POLYESTER POWDER COATING FOR CORROSION PROTECTION. INSTALL FAN WITH WITH STAINLESS STEEL FASTENERS AND HARDWARE. 2. FAN SHALL BE PROVIDED WITH CORROSION COATED WEATHER HOOD AND BIRDSCREEN OUTLET GUARD. 3. PROVIDE FAN WITH ALUMINUM SCROLL, INLET CONE, AND WHEEL. 4. FAN SHALL BE PROVIDED WITH INTEGRAL NEMA 4X DISCONNECT. 5. FAN MOTOR CONTROLLER SHALL BE CAPABLE OF MODULATING FAN SPEED BASED ON CONSTANT PRESSURE CONTROL STRATEGY AND SHALL HAVE DIAL ON MOTOR FOR AIRFLOW BALANCING. DUCT STATIC PRESSURE TAP SHALL BE REMOTELY MOUNTED AT THE 11TH FLOOR, APPROXIMATELY 2/3 OF THE WAY DOWN THE MAIN EXHAUST DUCT RISER. STATIC PRESSURE SETPOINT SHALL BE COMMISSIONED AND FINE-TUNED IN THE FIELD AS PART OF THE TESTING, ADJUSTING, AND BALANCING PROCEDURES. 6. FAN MOTOR SHALL BE UL LISTED. 7. FAN SHALL BE PROVIDED WITH SHAFT SEAL AND INLET FLANGE. 8. FAN SELECTION SHALL ACCOUNT FOR STATIC PRESSURE CORRECTIONS DUE TO DUCTED INLET, FREE DISCHARGE OUTLET, AND OUTLET GUARD. 9. FAN SHALL BE PROVIDED AND INSTALLED WITH WITH FACTORY SUPPLIED MOUNTING RAILS AND SPRING BASE ISOLATORS. 10. FAN SHALL BE SUPPLIED WITH BOLTED ACCESS DOOR. CONTRACTOR SHALL ENSURE THAT SUFFICIENT CLEARANCE SPACE IS PROVIDED TO PROPERLY ACCESS THE FAN FOR SERVICE AND MAINTENANCE PER MANUFACTURER REQUIREMENTS. 11. STRUCTURAL SUPPORTS AND SPRING ISOLATORS SHALL BE CORROSION COATED TO MATCH FAN HOUSING SALT SPRAY RATING PERFORMANCE. 12. PROVIDE FAN WITH VERTICAL UPBLAST CONFIGURATION AND FAN HOUSING DRAIN. 13. CONTRACTOR SHALL ENGAGE A FACTORY-AUTHORIZED TECHNICIAN TO PERFORM SYSTEM STARTUP, COMMISSIONING, AND PERFORMANCE TESTING OF THE CONSTANT PRESSURE FAN CONTROLS. TECHNICIAN SHALL PROVIDE A REPORT TO ENGINEER FOR REVIEW AND APPROVAL.

ACCESS PANEL SCHEDULE

MARK	SIZE: LENGTH (IN.)	SIZE: WIDTH (IN.)	RETURN AIR LOUVER: (YES/NO)	RETURN AIR LOUVER: MINIMUM FREE AREA (SQFT)	MATERIAL	FINISH	BASIS-OF-DESIGN MANUFACTURER	REMARKS
AP-1	42	30	YES	0.7	ALUMINUM	STUCCO EMBOSSED	GRILLE TECH	SEE NOTES
AP-2	48	30	YES	1.1	ALUMINUM	STUCCO EMBOSSED	GRILLE TECH	SEE NOTES
AP-3	60	30	YES	1.5	ALUMINUM	STUCCO EMBOSSED	GRILLE TECH	SEE NOTES
AP-4	48	30	NO	–	ALUMINUM	STUCCO EMBOSSED	GRILLE TECH	SEE NOTES
AP-5	60	32	NO	–	ALUMINUM	STUCCO EMBOSSED	GRILLE TECH	SEE NOTES
AP-6	76	32	NO	–	ALUMINUM	STUCCO EMBOSSED	GRILLE TECH	SEE NOTES
AP-7	82	48	NO	–	ALUMINUM	STUCCO EMBOSSED	GRILLE TECH	SEE NOTES
AP-8	48	36	NO	–	ALUMINUM	STUCCO EMBOSSED	GRILLE TECH	SEE NOTES

NOTES: 1. COORDINATE FINISH COLOR WITH OWNER AND ARCHITECT. 2. LOCATE ACCESS PANEL AS SHOWN ON PLANS UNDERNEATH FCU AND WITH REQUIRED CLEARANCE ON PIPE CONNECTION SIDE OF FCU.

GRILLE, REGISTER & DIFFUSER SCHEDULE

MARK	TYPE	SERVICE	NECK SIZE (IN.)	DUCT SIZE (IN.)	FACE SIZE (IN.)	DAMPER	BASIS-OF-DESIGN MANUFACTURER	BASIS-OF-DESIGN MODEL NO.	REMARKS
1	GRILLE	SUPPLY	SEE PLANS	–	NECK + 2.5"	NONE	TITUS	301FS	SEE NOTES
2	GRILLE	RETURN	SEE PLANS	–	NECK + 2.5"	NONE	TITUS	350FL	SEE NOTES
3	DIFFUSER	SUPPLY	–	SEE PLANS	DUCT + 5.5"	OPPOSED BLADE	TITUS	TDC-AA	SEE NOTES
4	DIFFUSER	SUPPLY	–	SEE PLANS	DUCT + 5.5"	NONE	TITUS	TDC-AA	SEE NOTES
5	DIFFUSER	SUPPLY	SEE PLANS	18x18	24x24	RADIAL BLADE	TITUS	TDC-AA	SEE NOTES
6	DIFFUSER	SUPPLY	SEE PLANS	9x9	12x12	RADIAL BLADE	TITUS	TDC-AA	SEE NOTES
7	DIFFUSER	SUPPLY	SEE PLANS	18x18	24x24	NONE	TITUS	TDC-AA	SEE NOTES
8	GRILLE	RET. / EXH. / TRANS.	SEE PLANS	–	24x24	NONE	TITUS	PAR-AA	SEE NOTES
9	REGISTER	RET. / EXH. / TRANS.	SEE PLANS	–	24x24	OPPOSED BLADE	TITUS	PAR-AA	SEE NOTES
10	REGISTER	SUPPLY	SEE PLANS	–	NECK + 2.5"	OPPOSED BLADE	TITUS	301FS	SEE NOTES

NOTES: 1. PROVIDE MANUAL VOLUME DAMPER ON DUCT BRANCH TAKEOFF TO ALL AIR DEVICES. PROVIDE YOUNG REGULATOR FLEX SHAFT DAMPER 1200-301-FS FOR HARD CEILING AREAS AND LOCATE CEILING CUP IN AN INCONSPICUOUS AREA 2. PROVIDE MARK 1 AND MARK 2 AIR DEVICES WITH SURFACE MOUNT BORDER TYPE AND CONCEALED SCREW FASTENING. 3. PROVIDE MARK 3 AIR DEVICES WITH SURFACE MOUNT BORDER TYPE AND RECTANGULAR NECK MOUNTED OPPOSED BLADE DAMPER. THROW PATTERN SHALL BE AS SHOWN ON DRAWINGS. 4. PROVIDE MARK 4 AIR DEVICES WITH SURFACE MOUNT BORDER TYPE. THROW PATTERN SHALL BE AS SHOWN ON DRAWINGS. 5. PROVIDE MARK 5 AND MARK 6 AIR DEVICES WITH SURFACE MOUNT BORDER TYPE AND ROUND NECK MOUNTED RADIAL SLIDING BLADE DAMPER. THROW PATTERN SHALL BE AS SHOWN ON DRAWINGS. 6. PROVIDE MARK 5 AND MARK 6 AIR DEVICES WITH SURFACE MOUNT BORDER TYPE. THROW PATTERN SHALL BE AS SHOWN ON DRAWINGS. 7. PROVIDE MARK 8 AIR DEVICES WITH SURFACE MOUNT BORDER TYPE. 8. PROVIDE MARK 9 AIR DEVICES WITH SURFACE MOUNT BORDER TYPE AND NECK MOUNTED OPPOSED BLADE DAMPER. 9. PROVIDE MARK 10 AIR DEVICES WITH SURFACE MOUNT BORDER TYPE, EXTERNAL SCREW FASTENING, AND NECK MOUNTED OPPOSED BLADE DAMPER.

CROSSLAND ENGINEERING
Big Firm Results. Small Firm Service.
3371 Loulu Street, Honolulu, HI 96822
(808) 462-8484 | info@crosslandeng.com | www.crosslandeng.com

ENGINEER:
THIS WORK WAS PREPARED BY ME OR UNDER MY SUPERVISION AND CONSTRUCTION OF THIS PROJECT WILL BE UNDER MY OBSERVATION.
ANDREW S. CROSSLAND
LICENSED PROFESSIONAL ENGINEER No. 16028-M
HAWAII U.S.A.
EXPIRES: 4/30/2020

DEVELOPER:
CALIFORNIA INVESTMENT REGIONAL CENTER, LLC

PROJECT OWNER:
HAWAII CITY PLAZA, LP

Hawaii City Plaza
Honolulu, Hawaii
710 Sheridan Street
TMK 2-3-014: Parcels 002, 004, & 011

PERMIT SET

DATE 2019 MARCH 19

PROJECT # 15028-02

SHEET TITLE
HVAC SCHEDULES

SHEET NO.
M-002

SUPPLY FAN SCHEDULE

MARK	SERVICE	LOCATION	CONFIGURATION		FAN DATA			MOTOR DATA						ELECTRICAL				INLET SONES	WEIGHT (LBS.)	DIMENSIONS (L" x DIA.")	BASIS-OF-DESIGN MANUFACTURER	BASIS-OF-DESIGN MODEL NO.	REMARKS
			FAN TYPE	DISCHARGE DIRECTION	AIR QUANTITY (CFM)	EXTERNAL STATIC PRESSURE (IN. W.G.)	FAN SPEED (RPM)	MOTOR OPERATING POWER (BHP)	MOTOR SIZE (HP)	MOTOR WATTS (W)	MAXIMUM MOTOR SPEED (RPM)	DRIVE TYPE	MOTOR SPEED CONTROLLER TYPE	VOLTAGE	PHASE	HERTZ	EMERGENCY POWER (YES/NO)						
SPF-1	STAIRWELL 1 PRESSURIZATION	ROOF	AXIAL INLINE	HORIZONTAL	13,000	1.25	–	5.69	7.5	–	–	DIRECT	VFD	208	3	60	YES	–	690	54x36	GREENHECK	AX-90-275-0609	SEE NOTES
SPF-2	STAIRWELL 2 PRESSURIZATION	ROOF	AXIAL INLINE	HORIZONTAL	13,000	1.25	–	5.69	7.5	–	–	DIRECT	VFD	208	3	60	YES	–	690	54x36	GREENHECK	AX-90-275-0609	SEE NOTES

NOTES: 1. ALL FANS SHALL HAVE SINGLE POINT POWER CONNECTION AND SHALL BE PROVIDED WITH APPROPRIATE NEMA 4X VFD AND FACTORY MOUNTED DISCONNECT. 2. FAN HOUSING SHALL BE STEEL CONSTRUCTION WITH FULL COVERAGE FACTORY APPLIED HI-PRO POLYESTER POWDER COATING FOR CORROSION PROTECTION. INSTALL FAN WITH WITH STAINLESS STEEL FASTENERS AND HARDWARE. 3. FAN SHALL BE PROVIDED WITH CORROSION COATED WEATHER HOOD AND BIRDSCREEN INLET GUARD. 4. PROVIDE FAN WITH NEMA 4X WALL MOUNTED OUTDOOR VFD FOR FAN SPEED MODULATION IN ACCORDANCE WITH STAIRWELL PRESSURIZATION SEQUENCE OF OPERATIONS. 5. FAN MOTOR SHALL BE NEMA PREMIUM EFFICIENCY TYPE, VFD RATED, UL LISTED, TEFC, INSULATION CLASS F. 6. FAN SELECTION SHALL ACCOUNT FOR STATIC PRESSURE CORRECTIONS DUE TO INLET AND DISCHARGE DUCT TURN, AND INLET GUARD. 7. FAN SHALL BE PROVIDED AND INSTALLED WITH WITH FACTORY SUPPLIED RESTRAINED SPRING BASE MOUNT ISOLATORS. 8. FAN SHALL BE SUPPLIED WITH BOLTED INSPECTION DOOR AND INSPECTION SECTION. CONTRACTOR SHALL ENSURE THAT SUFFICIENT CLEARANCE SPACE IS PROVIDED TO PROPERLY ACCESS THE FAN FOR SERVICE AND MAINTENANCE PER MANUFACTURER REQUIREMENTS. 9. STRUCTURAL SUPPORTS AND SPRING ISOLATORS SHALL BE CORROSION COATED TO MATCH FAN HOUSING SALT SPRAY RATING PERFORMANCE. 10. PROVIDE MOTORIZED DAMPER AND DUCTED WEATHER HOOD AT FAN INLET. 11. FAN SHALL BE CONNECTED TO STANDBY POWER VIA ON-SITE EMERGENCY GENERATOR.

BAROMETRIC RELIEF GRAVITY VENTILATOR SCHEDULE

MARK	SERVICE	LOCATION	CONTROLLED BY	GRAVITY VENTILATOR							BAROMETRIC RELIEF DAMPER						ROOF CURB					WEIGHT (LBS.)	DIMENSIONS (W" x L" x H")	REMARKS
				AIR QUANTITY (CFM)	MAX. STATIC PRESS. DROP (IN. W.G.)	MAX. THROAT VELOCITY (FPM)	THROAT SIZE WIDTH (IN.)	THROAT SIZE LENGTH (IN.)	BASIS-OF-DESIGN MANUFACTURER	BASIS-OF-DESIGN MODEL NO.	DESIGN RELIEF PRESSURE (IN. W.G.)	START-TO-OPEN PRESSURE (IN. W.G.)	DAMPER SIZE WIDTH (IN.)	DAMPER SIZE LENGTH (IN.)	BASIS-OF-DESIGN MANUFACTURER	BASIS-OF-DESIGN MODEL NO.	WIDTH (IN.)	LENGTH (IN.)	HEIGHT (IN.)	BASIS-OF-DESIGN MANUFACTURER	BASIS-OF-DESIGN MODEL NO.			
BRV-1	STAIRWELL 1 PRESSURIZATION	ROOF	LIGHT SWITCH	2,500	0.1	500	24	30	GREENHECK	FGR	0.25	0.05	24	30	GREENHECK	BR-10	30	36	8	GREENHECK	GPF	110	38x51x27	SEE NOTES
BRV-2	STAIRWELL 2 PRESSURIZATION	ROOF	LIGHT SWITCH	2,500	0.1	500	24	30	GREENHECK	FGR	0.25	0.05	24	30	GREENHECK	BR-10	30	36	8	GREENHECK	GPF	110	38x51x27	SEE NOTES

NOTES: GV 1. GRAVITY VENTILATOR SHALL BE GALVANIZED STEEL CONSTRUCTION WITH FULL COVERAGE FACTORY APPLIED HI-PRO POLYESTER POWDER COATING FOR CORROSION PROTECTION. INSTALL WITH STAINLESS STEEL FASTENERS AND HARDWARE. 2. PROVIDE WITH STAINLESS STEEL BIRDSCREEN, FOAM CURB SEAL, AND TIE DOWN POINTS.

NOTES: BRD 1. BAROMETRIC RELIEF DAMPER SHALL BE GALVANIZED STEEL CONSTRUCTION WITH FULL COVERAGE FACTORY APPLIED HI-PRO POLYESTER POWDER COATING FOR CORROSION PROTECTION. 2. DAMPER SHALL BE AN ECCENTRICALLY PIVOTED BACKDRAFT DAMPER FOR LOW VELOCITY SYSTEMS. DAMPER SHALL BE HORIZONTALLY MOUNTED AND DESIGNED TO ALLOW VERTICAL AIRFLOW UP WITH PREVENTION OF REVERSE AIRFLOW. 2. DAMPER SHALL HAVE NO INTAKE OR DISCHARGE FLANGE.

NOTES: CURB 1. ROOF CURB SHALL BE GALVANIZED STEEL CONSTRUCTION WITH FULL COVERAGE FACTORY APPLIED HI-PRO POLYESTER POWDER COATING FOR CORROSION PROTECTION 2. ROOF CURB SHALL BE A STRAIGHT-SIDED ROOF CURB INTENDED FOR USE ON FLAT ROOFS. 3. ROOF CURB SHALL BE PROVIDED WITH DAMPER TRAY FOR BAROMETRIC RELIEF DAMPER APPLICATION.

CROSSLAND ENGINEERING
Big Firm Results. Small Firm Service.
87th Lewers Street, Honolulu, HI 96815
(808) 462-8646 | info@crosslandeng.com | www.crosslandeng.com

ENGINEER:
THIS WORK WAS PREPARED BY ME OR UNDER MY SUPERVISION AND CONSTRUCTION OF THIS PROJECT WILL BE UNDER MY OBSERVATION.

ANDREW S. CROSSLAND ★ LICENSED PROFESSIONAL ENGINEER No. 16028-M ★ HAWAII U.S.A.

EXPIRES: 4/30/2020

DEVELOPER:
CALIFORNIA INVESTMENT REGIONAL CENTER, LLC

PROJECT OWNER:
HAWAII CITY PLAZA, LP

Hawaii City Plaza
Honolulu, Hawaii
710 Sheridan Street
TMK 2-3-014: Parcels 002, 004, & 011

PERMIT SET

DATE 2019 MARCH 19

PROJECT # 15028-02

SHEET TITLE
HVAC SCHEDULES

SHEET NO.
M-003

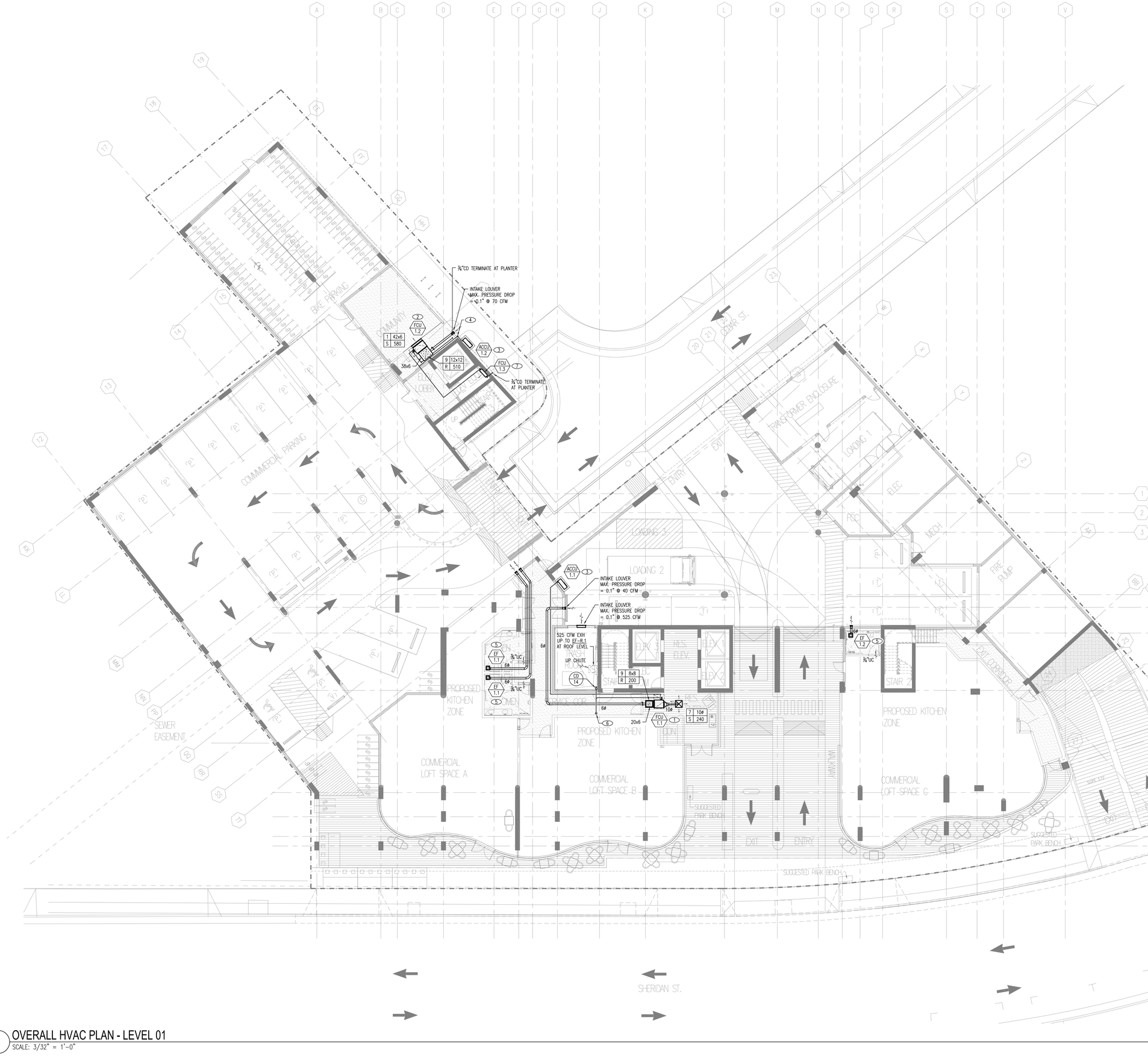

1 OVERALL HVAC PLAN - LEVEL 01
SCALE: 3/32" = 1'-0"

8 4 0 8 16

SHEET NOTES

1. REFER TO RISER DIAGRAMS ON SHEET M-501 FOR DUCT SIZING AND CONFIGURATION OF ALL DUCTWORK WITHIN DUCT SHAFTS SHOWN ON THIS SHEET.
2. THE CONTRACTOR SHALL LOCATE ALL VOLUME DAMPERS IN READILY ACCESSIBLE AREAS FOR TESTING, ADJUSTING, AND BALANCING PROCEDURES. PROVIDE YOUNG REGULATOR FLEX SHAFT DAMPER 1200-301-FS FOR HARD CEILING AREAS AND LOCATE CEILING CUP IN AN INCONSPICUOUS AREA.
3. REFRIGERANT AND CONDENSATE DRAIN PIPING SHOWN SCHEMATICALLY. PROVIDE ADJUSTMENTS AND OFFSETS WHERE NECESSARY FOR A COMPLETE INSTALLATION. CONTRACTOR SHALL CONFIRM REFRIGERANT PIPE SIZES AND ROUTING WITH EQUIPMENT MANUFACTURER.
4. COORDINATE EXACT LOCATION OF ALL THERMOSTATS WITH DEVELOPER AND ARCHITECT. ALL THERMOSTATS IN COMMON AREAS SHALL BE INSTALLED WITH LOCKABLE TAMPER-PROOF COVER.
5. EACH FAN COIL UNIT HAS INTEGRAL CONDENSATE PUMP. ALL CONDENSATE DRAIN PIPING SHALL BE INSTALLED AS HIGH AS POSSIBLE.

KEY NOTES

1. INSTALL NEW FCU PER MANUFACTURER INSTRUCTIONS WITH REQUIRED SERVICE CLEARANCES. LOCATE ACCESS PANEL BENEATH FCU AND OFFSET TO ALLOW 18" ACCESS ON PIPE CONNECTION SIDE OF UNIT. ADJUST RETURN AIR GRILLE AND OUTSIDE AIR DUCT OPPOSED BLADE DAMPERS TO ACHIEVE 40 CFM OUTSIDE AIR.
2. INSTALL NEW FCU PER MANUFACTURER INSTRUCTIONS WITH REQUIRED SERVICE CLEARANCES. LOCATE ACCESS PANEL BENEATH FCU AND OFFSET TO ALLOW 12" ACCESS ON PIPE CONNECTION SIDE OF UNIT. ADJUST RETURN AIR GRILLE AND OUTSIDE AIR DUCT OPPOSED BLADE DAMPERS TO ACHIEVE 70 CFM OUTSIDE AIR.
3. INSTALL NEW ACCU PER MANUFACTURER INSTRUCTIONS WITH REQUIRED SERVICE CLEARANCES. EQUIPMENT BASE SHALL BE MOUNTED AND ANCHORED TO A MINIMUM 4" THICK CONCRETE PAD. ANCHORING SYSTEM SHALL BE SUBMITTED AS A DELEGATED-DESIGN, STAMPED BY A HAWAII LICENSED STRUCTURAL ENGINEER. PROVIDE NEOPRENE WAFFLE VIBRATION ISOLATION PADS. PROVIDE JACKET OVER INSULATED REFRIGERANT PIPING LOCATED OUTDOORS; SEE SPECS.
4. PENETRATION OF LIQUID AND GAS REFRIGERANT PIPES THROUGH BUILDING ENVELOPE SHALL BE PER ARCHITECTURAL GLAZING DETAILS.
5. INSTALL EXHAUST FAN PER MANUFACTURER INSTRUCTIONS. INTERLOCK THE FAN WITH LIGHT SWITCH. INSTALL WALL CAP AT TERMINATION AS SPECIFIED IN EQUIPMENT SCHEDULE.
6. TERMINATE 4"CD AT FUNNEL DRAIN 10'-0" ABOVE FINISHED FLOOR WITH 1" AIR GAP. SEE PLUMBING DRAWINGS FOR CONTINUATION.
7. INSTALL NEW FCU PER MANUFACTURER INSTRUCTIONS WITH REQUIRED SERVICE CLEARANCES. DO NOT LOCATE ABOVE ELEVATOR EQUIPMENT.

CROSSLAND ENGINEERING
Big Firm Results. Small Firm Service.
[illegible] Lewers Street, Honolulu, HI 96815
(808) 462-8640 | info@crosslandeng.com | www.crosslandeng.com

ENGINEER:
THIS WORK WAS PREPARED BY ME OR UNDER MY SUPERVISION AND CONSTRUCTION OF THIS PROJECT WILL BE UNDER MY OBSERVATION.

ANDREW S. CROSSLAND
LICENSED PROFESSIONAL ENGINEER
No. 16028-M
HAWAII U.S.A.

EXPIRES: 4/30/2020

DEVELOPER:
CALIFORNIA INVESTMENT REGIONAL CENTER, LLC

PROJECT OWNER:
HAWAII CITY PLAZA, LP

Hawaii City Plaza
Honolulu, Hawaii
710 Sheridan Street
TMK 2-3-014: Parcels 002, 004, & 011

PERMIT SET

DATE 2019 MARCH 19

PROJECT # 15028-02

SHEET TITLE
OVERALL HVAC PLAN - LEVEL 01

SHEET NO.
M-101

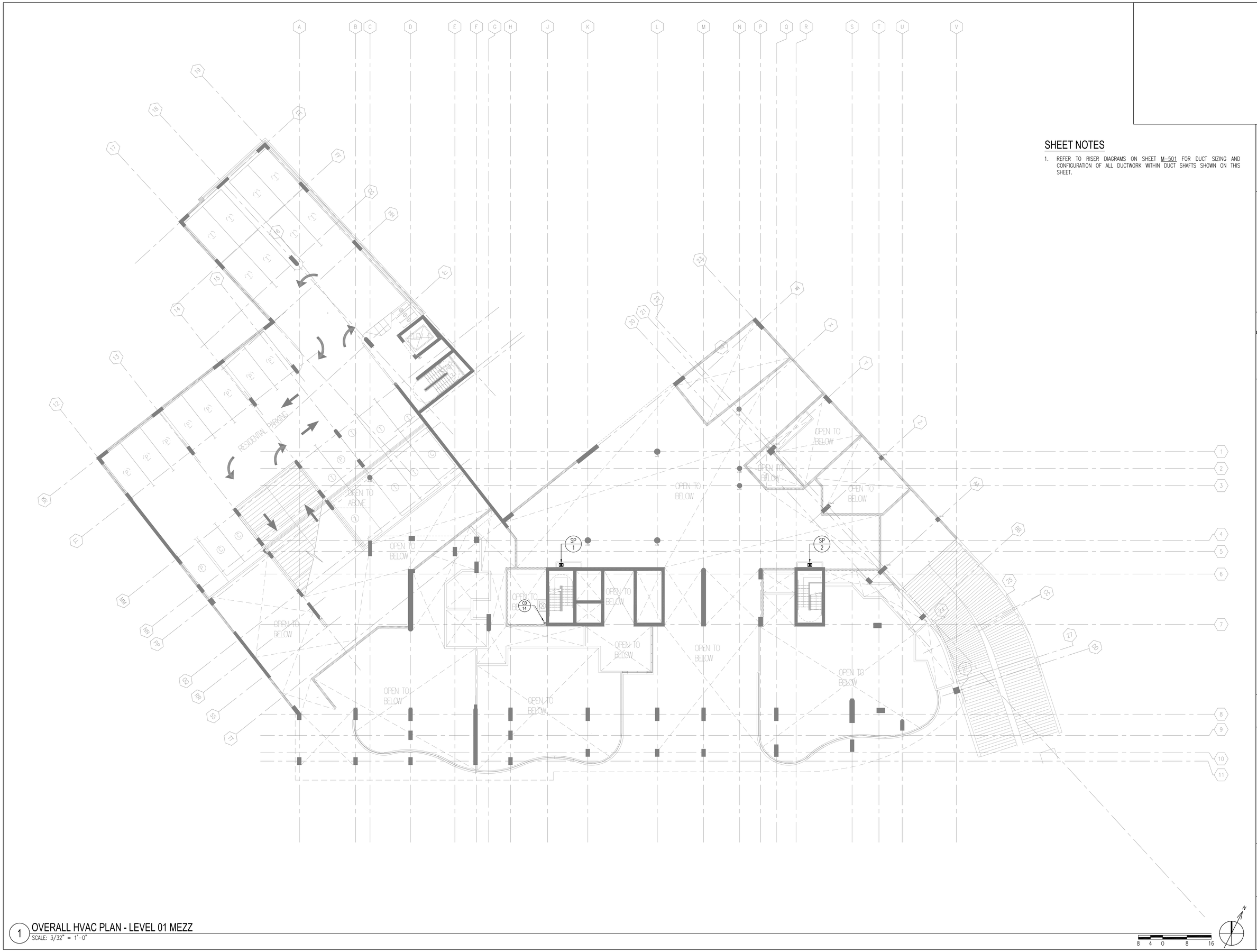

SHEET NOTES

1. REFER TO RISER DIAGRAMS ON SHEET M-501 FOR DUCT SIZING AND CONFIGURATION OF ALL DUCTWORK WITHIN DUCT SHAFTS SHOWN ON THIS SHEET.

1 OVERALL HVAC PLAN - LEVEL 01 MEZZ
SCALE: 3/32" = 1'-0"

CROSSLAND ENGINEERING
Big Firm Results. Small Firm Service.
1511 Lusu Street, Honolulu, HI 96822
808.482.8484 | info@crosslandeng.com | www.crosslandeng.com

ENGINEER:
THIS WORK WAS PREPARED BY ME OR UNDER MY SUPERVISION AND CONSTRUCTION OF THIS PROJECT WILL BE UNDER MY OBSERVATION.

ANDREW S. CROSSLAND
LICENSED PROFESSIONAL ENGINEER
No. 16028-M
HAWAII U.S.A.

EXPIRES: 4/30/2020

DEVELOPER:
CALIFORNIA INVESTMENT REGIONAL CENTER, LLC

PROJECT OWNER:
HAWAII CITY PLAZA, LP

Hawaii City Plaza
Honolulu, Hawaii
710 Sheridan Street
TMK 2-3-014: Parcels 002, 004, & 011

PERMIT SET

DATE 2019 MARCH 19

PROJECT # 15028-02

SHEET TITLE
OVERALL HVAC PLAN - LEVEL 01 MEZZ

SHEET NO.
M-102

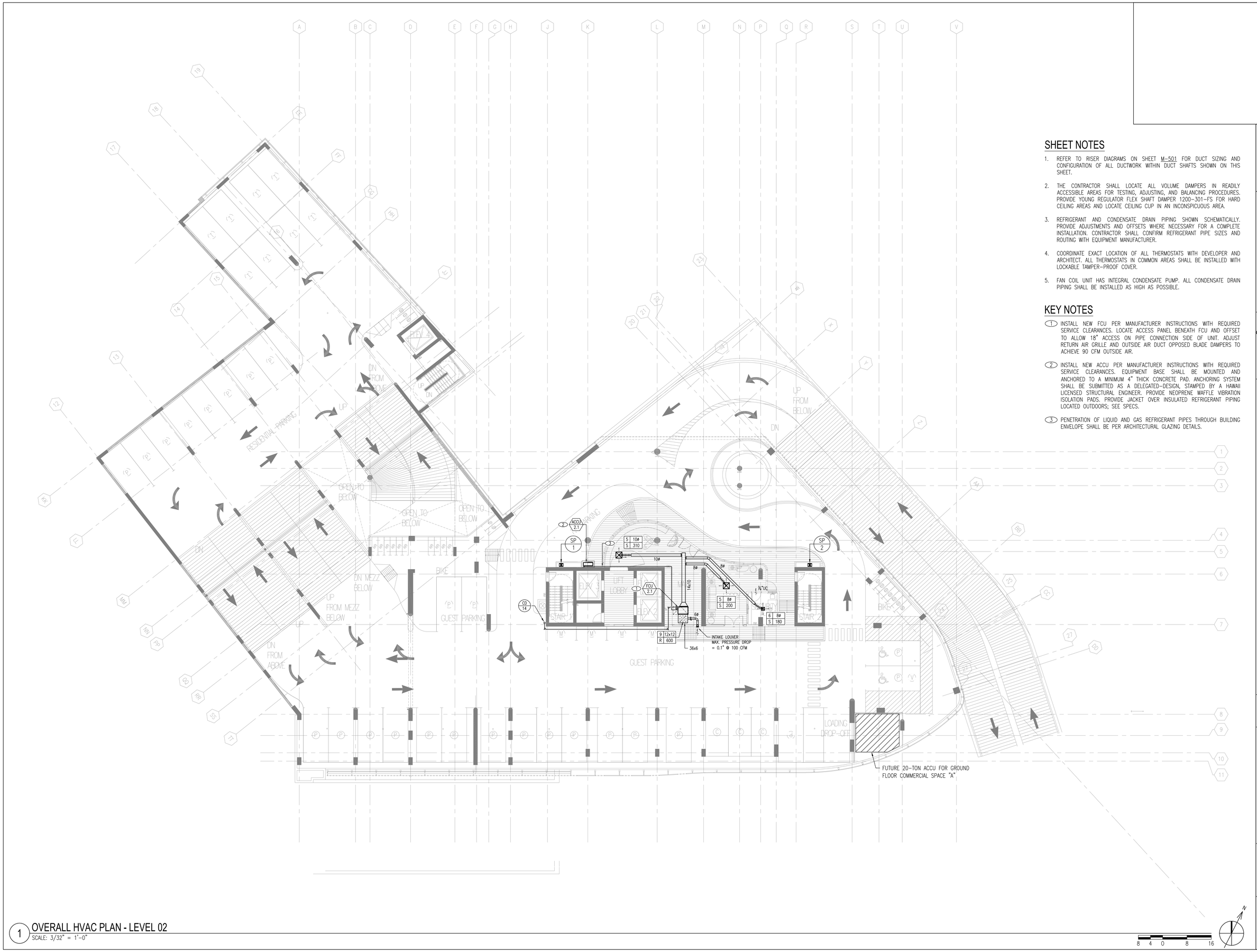

1 OVERALL HVAC PLAN - LEVEL 02
SCALE: 3/32" = 1'-0"

SHEET NOTES

1. REFER TO RISER DIAGRAMS ON SHEET M-501 FOR DUCT SIZING AND CONFIGURATION OF ALL DUCTWORK WITHIN DUCT SHAFTS SHOWN ON THIS SHEET.
2. THE CONTRACTOR SHALL LOCATE ALL VOLUME DAMPERS IN READILY ACCESSIBLE AREAS FOR TESTING, ADJUSTING, AND BALANCING PROCEDURES. PROVIDE YOUNG REGULATOR FLEX SHAFT DAMPER 1200-301-FS FOR HARD CEILING AREAS AND LOCATE CEILING CUP IN AN INCONSPICUOUS AREA.
3. REFRIGERANT AND CONDENSATE DRAIN PIPING SHOWN SCHEMATICALLY. PROVIDE ADJUSTMENTS AND OFFSETS WHERE NECESSARY FOR A COMPLETE INSTALLATION. CONTRACTOR SHALL CONFIRM REFRIGERANT PIPE SIZES AND ROUTING WITH EQUIPMENT MANUFACTURER.
4. COORDINATE EXACT LOCATION OF ALL THERMOSTATS WITH DEVELOPER AND ARCHITECT. ALL THERMOSTATS IN COMMON AREAS SHALL BE INSTALLED WITH LOCKABLE TAMPER-PROOF COVER.
5. FAN COIL UNIT HAS INTEGRAL CONDENSATE PUMP. ALL CONDENSATE DRAIN PIPING SHALL BE INSTALLED AS HIGH AS POSSIBLE.

KEY NOTES

1. INSTALL NEW FCU PER MANUFACTURER INSTRUCTIONS WITH REQUIRED SERVICE CLEARANCES. LOCATE ACCESS PANEL BENEATH FCU AND OFFSET TO ALLOW 18" ACCESS ON PIPE CONNECTION SIDE OF UNIT. ADJUST RETURN AIR GRILLE AND OUTSIDE AIR DUCT OPPOSED BLADE DAMPERS TO ACHIEVE 90 CFM OUTSIDE AIR.
2. INSTALL NEW ACCU PER MANUFACTURER INSTRUCTIONS WITH REQUIRED SERVICE CLEARANCES. EQUIPMENT BASE SHALL BE MOUNTED AND ANCHORED TO A MINIMUM 4" THICK CONCRETE PAD. ANCHORING SYSTEM SHALL BE SUBMITTED AS A DELEGATED-DESIGN, STAMPED BY A HAWAII LICENSED STRUCTURAL ENGINEER. PROVIDE NEOPRENE WAFFLE VIBRATION ISOLATION PADS. PROVIDE JACKET OVER INSULATED REFRIGERANT PIPING LOCATED OUTDOORS; SEE SPECS.
3. PENETRATION OF LIQUID AND GAS REFRIGERANT PIPES THROUGH BUILDING ENVELOPE SHALL BE PER ARCHITECTURAL GLAZING DETAILS.

CROSSLAND ENGINEERING
Big Firm Results. Small Firm Service.
1571 Lusu Street, Honolulu, HI 96813
808.462.8484 | info@crosslandeng.com | www.crosslandeng.com

ENGINEER:
THIS WORK WAS PREPARED BY ME OR UNDER MY SUPERVISION AND CONSTRUCTION OF THIS PROJECT WILL BE UNDER MY OBSERVATION.

ANDREW S. CROSSLAND
LICENSED PROFESSIONAL ENGINEER
No. 16028-M
HAWAII U.S.A.

EXPIRES: 4/30/2020

DEVELOPER:
CALIFORNIA INVESTMENT REGIONAL CENTER, LLC

PROJECT OWNER:
HAWAII CITY PLAZA, LP

Hawaii City Plaza
Honolulu, Hawaii
710 Sheridan Street
TMK 2-3-014: Parcels 002, 004, & 011

PERMIT SET

DATE 2019 MARCH 19

PROJECT # 15028-02

SHEET TITLE
OVERALL HVAC PLAN - LEVEL 02

SHEET NO.
M-103

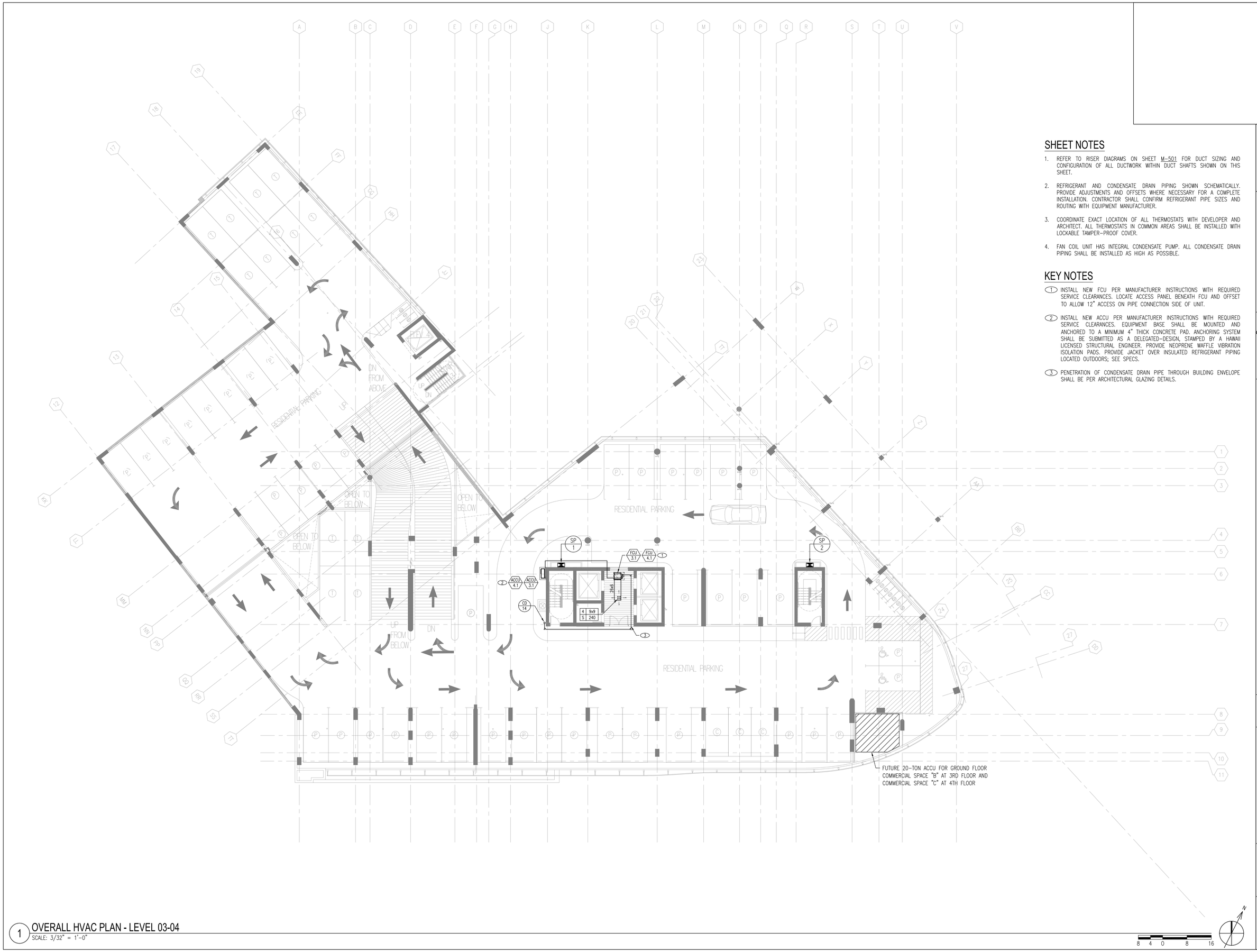

1 OVERALL HVAC PLAN - LEVEL 03-04
SCALE: 3/32" = 1'-0"

SHEET NOTES

1. REFER TO RISER DIAGRAMS ON SHEET M-501 FOR DUCT SIZING AND CONFIGURATION OF ALL DUCTWORK WITHIN DUCT SHAFTS SHOWN ON THIS SHEET.
2. REFRIGERANT AND CONDENSATE DRAIN PIPING SHOWN SCHEMATICALLY. PROVIDE ADJUSTMENTS AND OFFSETS WHERE NECESSARY FOR A COMPLETE INSTALLATION. CONTRACTOR SHALL CONFIRM REFRIGERANT PIPE SIZES AND ROUTING WITH EQUIPMENT MANUFACTURER.
3. COORDINATE EXACT LOCATION OF ALL THERMOSTATS WITH DEVELOPER AND ARCHITECT. ALL THERMOSTATS IN COMMON AREAS SHALL BE INSTALLED WITH LOCKABLE TAMPER-PROOF COVER.
4. FAN COIL UNIT HAS INTEGRAL CONDENSATE PUMP. ALL CONDENSATE DRAIN PIPING SHALL BE INSTALLED AS HIGH AS POSSIBLE.

KEY NOTES

1. INSTALL NEW FCU PER MANUFACTURER INSTRUCTIONS WITH REQUIRED SERVICE CLEARANCES. LOCATE ACCESS PANEL BENEATH FCU AND OFFSET TO ALLOW 12" ACCESS ON PIPE CONNECTION SIDE OF UNIT.
2. INSTALL NEW ACCU PER MANUFACTURER INSTRUCTIONS WITH REQUIRED SERVICE CLEARANCES. EQUIPMENT BASE SHALL BE MOUNTED AND ANCHORED TO A MINIMUM 4" THICK CONCRETE PAD. ANCHORING SYSTEM SHALL BE SUBMITTED AS A DELEGATED-DESIGN, STAMPED BY A HAWAII LICENSED STRUCTURAL ENGINEER. PROVIDE NEOPRENE WAFFLE VIBRATION ISOLATION PADS. PROVIDE JACKET OVER INSULATED REFRIGERANT PIPING LOCATED OUTDOORS; SEE SPECS.
3. PENETRATION OF CONDENSATE DRAIN PIPE THROUGH BUILDING ENVELOPE SHALL BE PER ARCHITECTURAL GLAZING DETAILS.

CROSSLAND ENGINEERING
Big Firm Results. Small Firm Service.
1571 Lusu Street, Honolulu, HI 96813
808.462.8484 | info@crosslandeng.com | www.crosslandeng.com

ENGINEER:
THIS WORK WAS PREPARED BY ME OR UNDER MY SUPERVISION AND CONSTRUCTION OF THIS PROJECT WILL BE UNDER MY OBSERVATION.

ANDREW S. CROSSLAND
LICENSED PROFESSIONAL ENGINEER
No. 16028-M
HAWAII U.S.A.

EXPIRES: 4/30/2020

DEVELOPER:
CALIFORNIA INVESTMENT REGIONAL CENTER, LLC

PROJECT OWNER:
HAWAII CITY PLAZA, LP

Hawaii City Plaza
Honolulu, Hawaii
710 Sheridan Street
TMK 2-3-014: Parcels 002, 004, & 011

PERMIT SET

DATE 2019 MARCH 19

PROJECT # 15028-02

SHEET TITLE
OVERALL HVAC PLAN - LEVEL 03-04

SHEET NO.
M-104

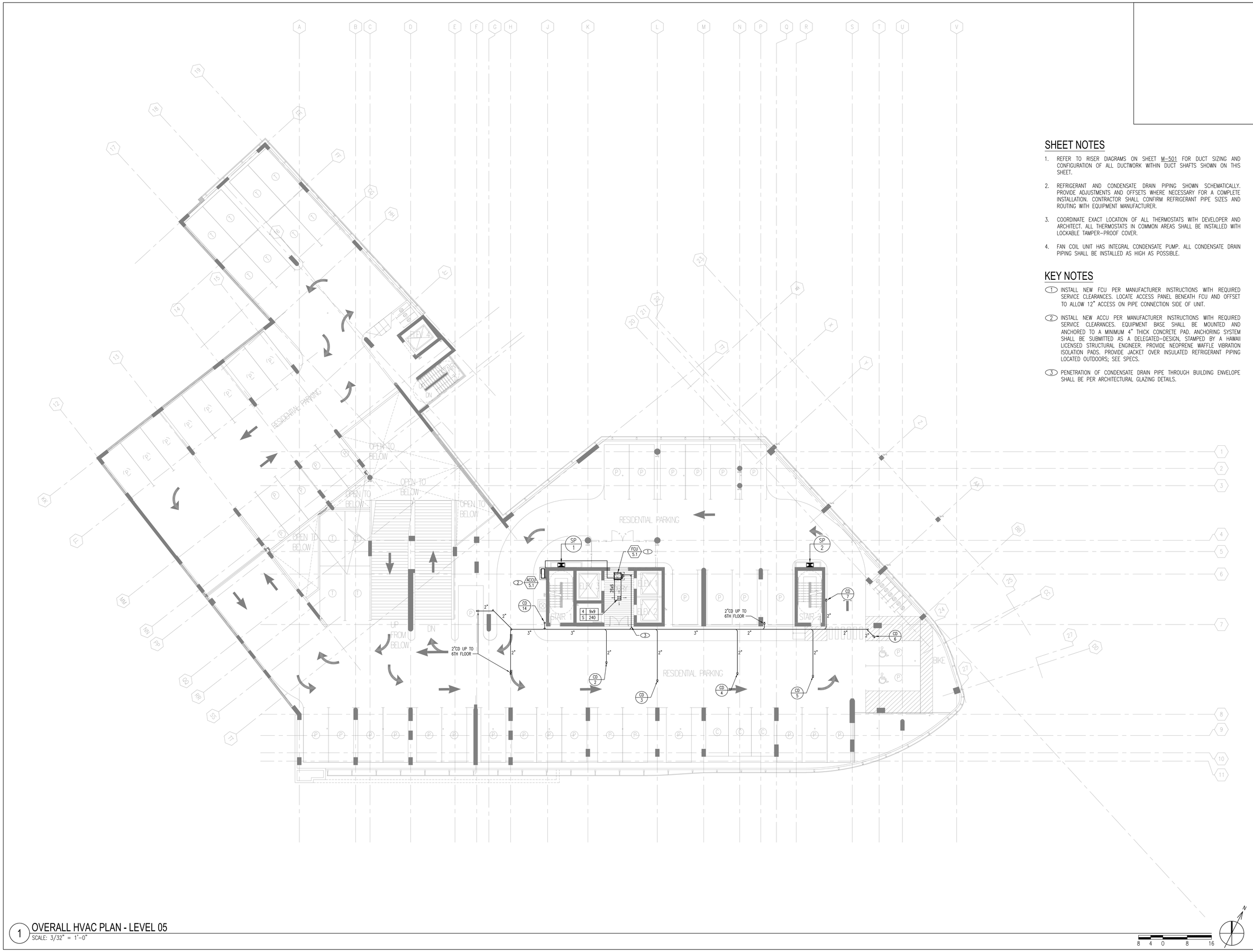

1 OVERALL HVAC PLAN - LEVEL 05
SCALE: 3/32" = 1'-0"

SHEET NOTES

1. REFER TO RISER DIAGRAMS ON SHEET M-501 FOR DUCT SIZING AND CONFIGURATION OF ALL DUCTWORK WITHIN DUCT SHAFTS SHOWN ON THIS SHEET.
2. REFRIGERANT AND CONDENSATE DRAIN PIPING SHOWN SCHEMATICALLY. PROVIDE ADJUSTMENTS AND OFFSETS WHERE NECESSARY FOR A COMPLETE INSTALLATION. CONTRACTOR SHALL CONFIRM REFRIGERANT PIPE SIZES AND ROUTING WITH EQUIPMENT MANUFACTURER.
3. COORDINATE EXACT LOCATION OF ALL THERMOSTATS WITH DEVELOPER AND ARCHITECT. ALL THERMOSTATS IN COMMON AREAS SHALL BE INSTALLED WITH LOCKABLE TAMPER-PROOF COVER.
4. FAN COIL UNIT HAS INTEGRAL CONDENSATE PUMP. ALL CONDENSATE DRAIN PIPING SHALL BE INSTALLED AS HIGH AS POSSIBLE.

KEY NOTES

1. INSTALL NEW FCU PER MANUFACTURER INSTRUCTIONS WITH REQUIRED SERVICE CLEARANCES. LOCATE ACCESS PANEL BENEATH FCU AND OFFSET TO ALLOW 12" ACCESS ON PIPE CONNECTION SIDE OF UNIT.
2. INSTALL NEW ACCU PER MANUFACTURER INSTRUCTIONS WITH REQUIRED SERVICE CLEARANCES. EQUIPMENT BASE SHALL BE MOUNTED AND ANCHORED TO A MINIMUM 4" THICK CONCRETE PAD. ANCHORING SYSTEM SHALL BE SUBMITTED AS A DELEGATED-DESIGN, STAMPED BY A HAWAII LICENSED STRUCTURAL ENGINEER. PROVIDE NEOPRENE WAFFLE VIBRATION ISOLATION PADS. PROVIDE JACKET OVER INSULATED REFRIGERANT PIPING LOCATED OUTDOORS; SEE SPECS.
3. PENETRATION OF CONDENSATE DRAIN PIPE THROUGH BUILDING ENVELOPE SHALL BE PER ARCHITECTURAL GLAZING DETAILS.

CROSSLAND ENGINEERING
Big Firm Results. Small Firm Service.
1571 Lusu Street, Honolulu, HI 96813
808.482.8484 | info@crosslandengineering.com | www.crosslandengineering.com

ENGINEER:
THIS WORK WAS PREPARED BY ME OR UNDER MY SUPERVISION AND CONSTRUCTION OF THIS PROJECT WILL BE UNDER MY OBSERVATION.

ANDREW S. CROSSLAND
LICENSED PROFESSIONAL ENGINEER
No. 16028-M
HAWAII U.S.A.

EXPIRES: 4/30/2020

DEVELOPER:
CALIFORNIA INVESTMENT REGIONAL CENTER, LLC

PROJECT OWNER:
HAWAII CITY PLAZA, LP

Hawaii City Plaza
Honolulu, Hawaii
710 Sheridan Street
TMK 2-3-014: Parcels 002, 004, & 011

PERMIT SET

DATE 2019 MARCH 19

PROJECT # 15028-02

SHEET TITLE
OVERALL HVAC PLAN - LEVEL 05

SHEET NO.
M-105

SHEET NOTES

1. REFRIGERANT AND CONDENSATE DRAIN PIPING SHOWN SCHEMATICALLY. PROVIDE ADJUSTMENTS AND OFFSETS WHERE NECESSARY FOR A COMPLETE INSTALLATION. CONTRACTOR SHALL CONFIRM REFRIGERANT PIPE SIZES AND ROUTING WITH EQUIPMENT MANUFACTURER.

2. EACH FAN COIL UNIT (EXCEPT FCU-6.6) HAS INTEGRAL CONDENSATE PUMP. ALL CONDENSATE DRAIN PIPING SHALL BE INSTALLED AS HIGH AS POSSIBLE.

KEY NOTES

(1) SEE SHEET M-111 FOR ADDITIONAL ACCU-6 INSTALLATION INFORMATION.

(2) REFRIGERANT PIPING UP SIDE OF BUILDING. PENETRATE EXTERIOR WALL ABOVE CEILING IN LIFT LOBBY. PIPING PENETRATION SHALL BE WATERTIGHT.

(3) WATERPROOF ELEVATOR SHAFT VENTILATION LOUVER AT TOP OF ELEVATOR SHAFT. MINIMUM FREE AREA SHALL BE NOT LESS THAN 3.5% OF THE AREA OF THE HOISTWAY NOR LESS THAN 3 SQFT AND SHALL BE IN ACCORDANCE WITH SECTION 3004.3 OF 2006 IBC.

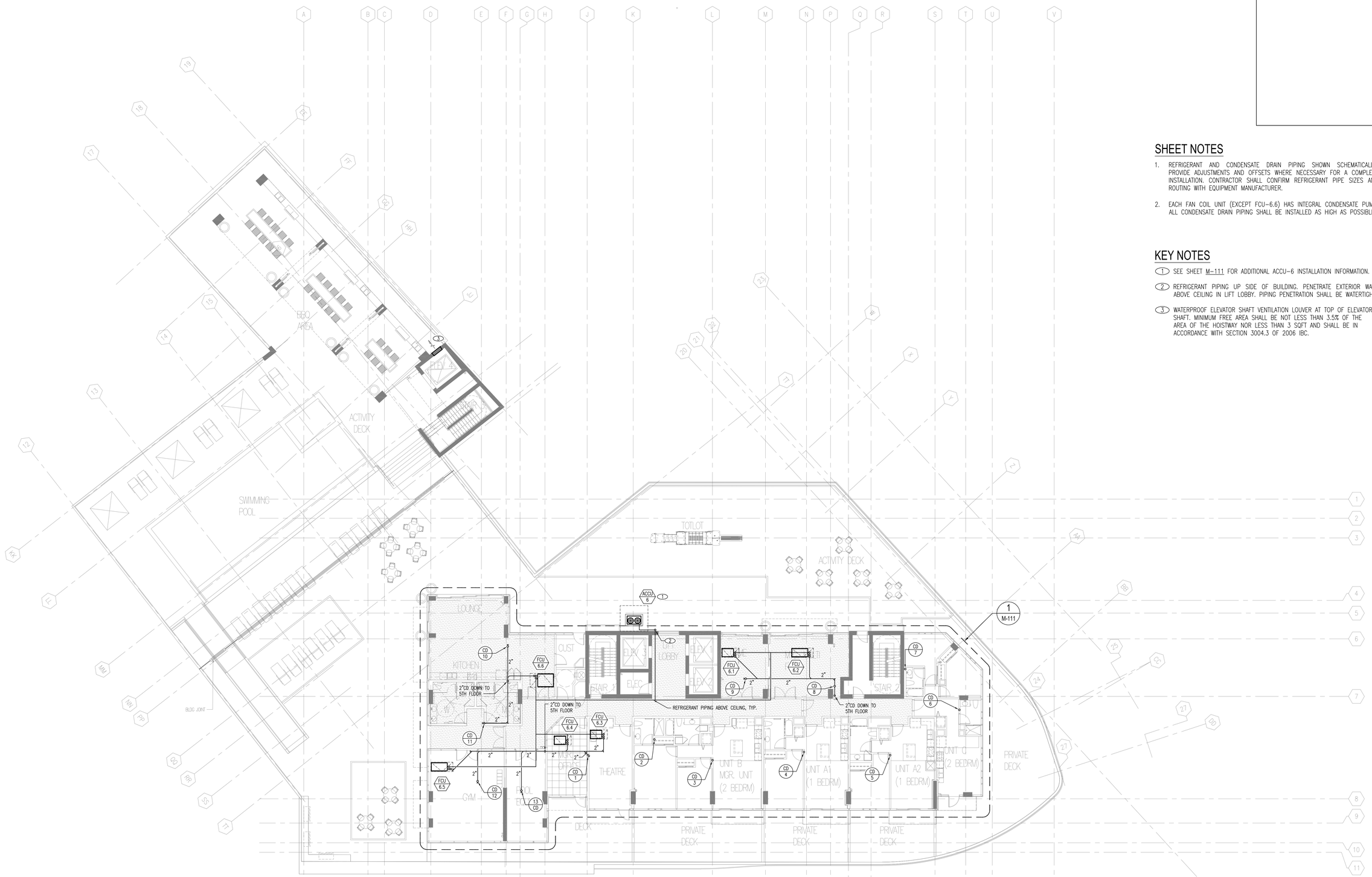

1 OVERALL HVAC PLAN - LEVEL 06
SCALE: 3/32" = 1'-0"

8 4 0 8 16

CROSSLAND ENGINEERING
Big Firm Results. Small Firm Service.

ENGINEER:
THIS WORK WAS PREPARED BY ME OR UNDER MY SUPERVISION AND CONSTRUCTION OF THIS PROJECT WILL BE UNDER MY OBSERVATION.

ANDREW S. CROSSLAND
LICENSED PROFESSIONAL ENGINEER
No. 16028-M
HAWAII U.S.A.

EXPIRES: 4/30/2020

DEVELOPER:
CALIFORNIA INVESTMENT REGIONAL CENTER, LLC

PROJECT OWNER:
HAWAII CITY PLAZA, LP

Hawaii City Plaza
Honolulu, Hawaii
710 Sheridan Street
TMK 2-3-014: Parcels 002, 004, & 011

PERMIT SET

DATE 2019 MARCH 19

PROJECT # 15028-02

SHEET TITLE
OVERALL HVAC PLAN - LEVEL 06

SHEET NO.
M-106

SHEET NOTES

1. REFER TO RISER DIAGRAMS ON SHEET M-501 FOR DUCT SIZING AND CONFIGURATION OF ALL DUCTWORK WITHIN DUCT SHAFTS SHOWN ON THIS SHEET.
2. THE CONTRACTOR SHALL LOCATE ALL VOLUME DAMPERS IN READILY ACCESSIBLE AREAS FOR TESTING, ADJUSTING, AND BALANCING PROCEDURES. PROVIDE YOUNG REGULATOR FLEX SHAFT DAMPER 1200-301-FS FOR HARD CEILING AREAS AND LOCATE CEILING CUP IN AN INCONSPICUOUS AREA.
3. TO MAINTAIN DRAWING CLARITY AND READABILITY, REFRIGERANT AND CONDENSATE DRAIN PIPING NOT SHOWN ON THIS PLAN. SEE SHEET M-106.
4. COORDINATE EXACT LOCATION OF ALL THERMOSTATS WITH DEVELOPER AND ARCHITECT. ALL THERMOSTATS IN COMMON AREAS SHALL BE INSTALLED WITH LOCKABLE TAMPER-PROOF COVER.
5. EACH FAN COIL UNIT (EXCEPT FCU-6.6) HAS INTEGRAL CONDENSATE PUMP. ALL CONDENSATE DRAIN PIPING SHALL BE INSTALLED AS HIGH AS POSSIBLE.

KEY NOTES

1. INSTALL NEW FCU PER MANUFACTURER INSTRUCTIONS WITH REQUIRED SERVICE CLEARANCES. LOCATE ACCESS PANEL BENEATH FCU AND OFFSET TO ALLOW 18" ACCESS ON PIPE CONNECTION SIDE OF UNIT.
2. INSTALL NEW FCU PER MANUFACTURER INSTRUCTIONS WITH REQUIRED SERVICE CLEARANCES. LOCATE ACCESS PANEL BENEATH FCU AND OFFSET TO ALLOW 24" ACCESS ON PIPE CONNECTION SIDE OF UNIT. DUCT SMOKE DETECTOR SHALL BE PROVIDED AND INSTALLED BY THE MECHANICAL CONTRACTOR; COORDINATE POWER, FIRE ALARM, AND SHUTDOWN CONTROLS WITH THE ELECTRICAL CONTRACTOR.
3. PROVIDE 10x8 KITCHEN EXHAUST DUCT WITH 22" SUBDUCT AT MAIN EXHAUST DUCT RISER. CONNECT TO OWNER FURNISHED KITCHEN EXHAUST HOOD. CONFIRM CONNECTION REQUIREMENTS WITH KITCHEN HOOD MANUFACTURER AND COORDINATE EXHAUST DUCT SIZE AND ROUTING WITH CABINET CONTRACTOR. KITCHEN EXHAUST MAXIMUM FLOW RATE SHALL BE 300 CFM.
4. INSTALL NEW ACCU PER MANUFACTURER INSTRUCTIONS WITH REQUIRED SERVICE CLEARANCES. EQUIPMENT BASE SHALL BE MOUNTED AND ANCHORED TO A MINIMUM 4" THICK CONCRETE PAD. ANCHORING SYSTEM SHALL BE SUBMITTED AS A DELEGATED-DESIGN, STAMPED BY A HAWAII LICENSED STRUCTURAL ENGINEER. PROVIDE NEOPRENE WAFFLE VIBRATION ISOLATION PADS. PROVIDE JACKET OVER INSULATED REFRIGERANT PIPING LOCATED OUTDOORS; SEE SPECS.
5. PENETRATION OF LIQUID AND GAS REFRIGERANT PIPES THROUGH BUILDING ENVELOPE SHALL BE PER ARCHITECTURAL GLAZING DETAILS.
6. CONNECT 16x6 OUTSIDE AIR DUCT TO MAIN OUTSIDE AIR DUCT RISER WITH FIRE/SMOKE DAMPER AND ACCESS PANELS AS REQUIRED.

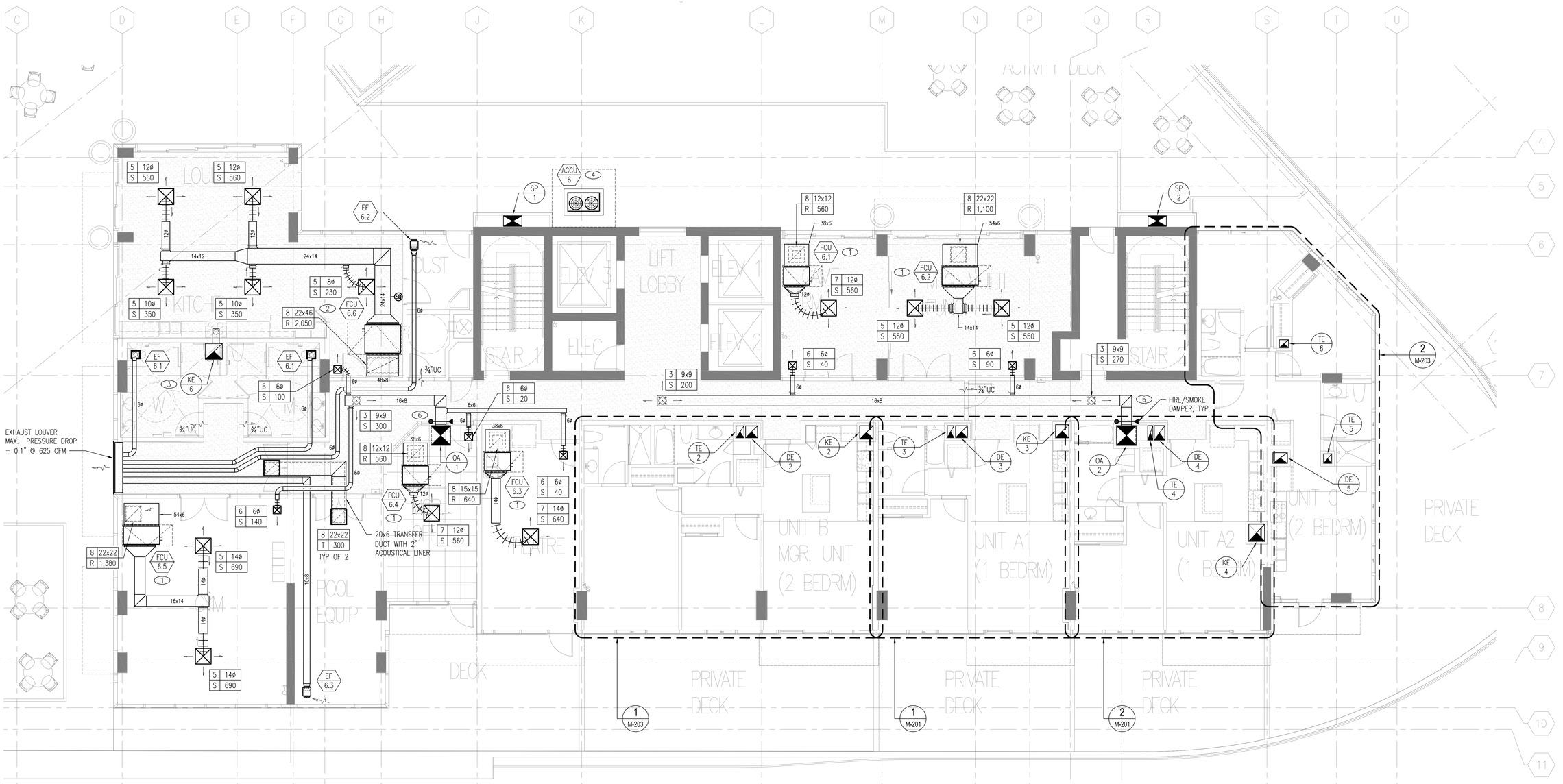

1 TOWER HVAC PLAN - LEVEL 06
SCALE: 3/16" = 1'-0"

4 2 0 4 8

CROSSLAND ENGINEERING
Big Firm Results. Small Firm Service.

ENGINEER:
THIS WORK WAS PREPARED BY ME OR UNDER MY SUPERVISION AND CONSTRUCTION OF THIS PROJECT WILL BE UNDER MY OBSERVATION.

ANDREW S. CROSSLAND
LICENSED PROFESSIONAL ENGINEER
No. 16028-M
HAWAII U.S.A.

EXPIRES: 4/30/2020

DEVELOPER:
CALIFORNIA INVESTMENT REGIONAL CENTER, LLC

PROJECT OWNER:
HAWAII CITY PLAZA, LP

Hawaii City Plaza
Honolulu, Hawaii
710 Sheridan Street
TMK 2-3-014: Parcels 002, 004, & 011

PERMIT SET

DATE 2019 MARCH 19

PROJECT # 15028-02

SHEET TITLE
TOWER HVAC PLAN - LEVEL 06

SHEET NO.
M-111

SHEET NOTES

1. REFER TO RISER DIAGRAMS ON SHEET M-501 FOR DUCT SIZING AND CONFIGURATION OF ALL DUCTWORK WITHIN DUCT SHAFTS SHOWN ON THIS SHEET.
2. THE CONTRACTOR SHALL LOCATE ALL VOLUME DAMPERS IN READILY ACCESSIBLE AREAS FOR TESTING, ADJUSTING, AND BALANCING PROCEDURES. PROVIDE YOUNG REGULATOR FLEX SHAFT DAMPER 1200-301-FS FOR HARD CEILING AREAS AND LOCATE CEILING CUP IN AN INCONSPICUOUS AREA.

KEY NOTES

(1) INSTALL 2-WAY CEILING DIFFUSER FOR PRETREATED OUTDOOR AIR SUPPLY TO CORRIDOR. CONNECT 16x6 OUTSIDE AIR DUCT TO MAIN OUTSIDE AIR DUCT RISER WITH FIRE/SMOKE DAMPER AND PROVIDE ACCESS PANELS AS REQUIRED.

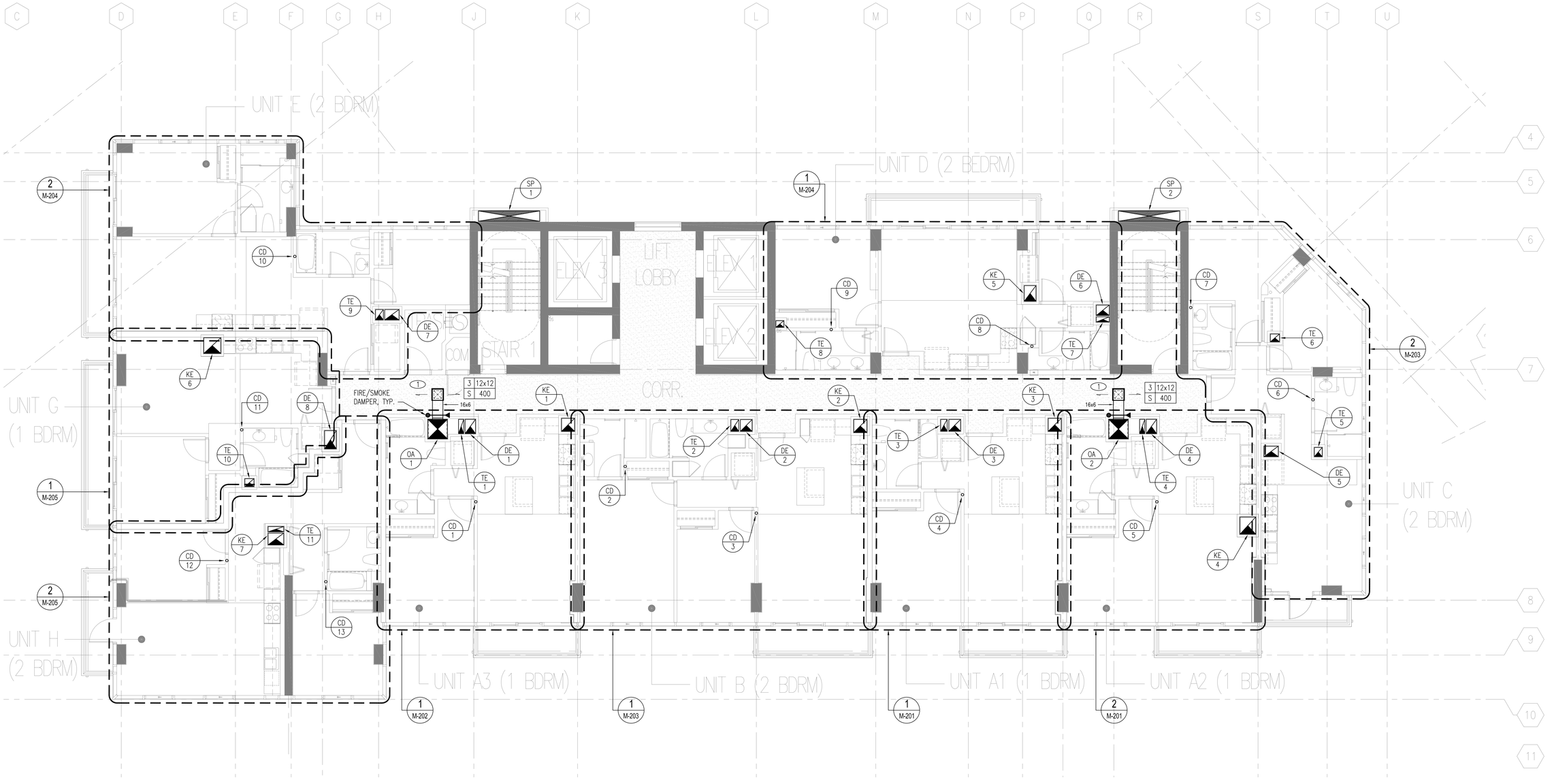

1 TOWER HVAC PLAN - LEVEL 07-26
SCALE: 3/16" = 1'-0"

4 2 0 4 8

CROSSLAND ENGINEERING
Big Firm Results. Small Firm Service.

ENGINEER:
THIS WORK WAS PREPARED BY ME OR UNDER MY SUPERVISION AND CONSTRUCTION OF THIS PROJECT WILL BE UNDER MY OBSERVATION.

ANDREW S. CROSSLAND
LICENSED PROFESSIONAL ENGINEER
No. 16028-M
HAWAII U.S.A.

EXPIRES: 4/30/2020

DEVELOPER:
CALIFORNIA INVESTMENT REGIONAL CENTER, LLC

PROJECT OWNER:
HAWAII CITY PLAZA, LP

Hawaii City Plaza
Honolulu, Hawaii
710 Sheridan Street
TMK 2-3-014: Parcels 002, 004, & 011

PERMIT SET

DATE 2019 MARCH 19

PROJECT # 15028-02

SHEET TITLE
TOWER HVAC PLAN - LEVEL 07-26

SHEET NO.
M-112

SHEET NOTES

1. CONTRACTOR SHALL ENSURE THAT SUFFICIENT CLEARANCE SPACE IS PROVIDED TO PROPERLY ACCESS ALL EQUIPMENT FOR SERVICE AND MAINTENANCE PER MANUFACTURER REQUIREMENTS.
2. ALL STRUCTURAL SUPPORTS AND SPRING ISOLATORS SHALL BE CORROSION COATED TO MEET OR EXCEED THE CORROSION AND SALT SPRAY RATING PERFORMANCE OF THE EQUIPMENT.
3. PROVIDE FLEXIBLE DUCT CONNECTION AT DUCTED INLET/OUTLET FOR EACH PIECE OF EQUIPMENT.
4. FOR ALL EXHAUST FANS PROVIDE SMOOTH DUCT TRANSITION FROM MAIN DUCT RISER ROOF PENETRATION TO INLET OF EXHAUST FAN. PROVIDE STRAIGHT HORIZONTAL DUCT RUN UPSTREAM OF FAN INLET A MINIMUM OF 3 WHEEL DIAMETERS OR AS SPECIFIED BY THE MANUFACTURER.
5. REFER TO RISER DIAGRAMS ON SHEET M-501 FOR DUCT SIZING AND CONFIGURATION OF ALL DUCTWORK WITHIN DUCT SHAFTS SHOWN ON THIS SHEET.
6. REFER TO ARCHITECTURAL DRAWINGS FOR ROOF SLOPES, DUCT SHAFT ROOF CURB, ROOF PENETRATION, FLASHING, AND WATERPROOFING DETAILS.
7. COORDINATE ALL WORK WITH ROOF WATERPROOFING CONTRACTOR AND ROOFING MATERIAL MANUFACTURER TO ENSURE INTEGRITY OF WATERPROOFING SYSTEM IS MAINTAINED.

KEY NOTES

(1) MOUNT DEDICATED OUTDOOR AIR SYSTEM ON MINIMUM 4" THICK CONCRETE PAD WITH SPRING ISOLATION. CONCRETE PAD, SPRING ISOLATION, AND ANCHORING DETAILS SHALL BE SUBMITTED AS A DELEGATED-DESIGN, STAMPED BY A HAWAII LICENSED STRUCTURAL ENGINEER. VIBRATION ISOLATION CRITERIA SHALL BE REVIEWED BY ACOUSTICAL CONSULTANT AS REQUIRED BY DEVELOPER. CONTRACTOR SHALL CHANGE AIR FILTERS AFTER CONSTRUCTION AND PRIOR TO OCCUPANCY. TERMINATE CONDENSATE DRAIN PIPING AT NEAREST ROOF DRAIN.

(2) MOUNT TRASH CHUTE EXHAUST FAN ON MINIMUM 4" THICK CONCRETE PAD WITH FACTORY SUPPLIED MOUNTING RAILS AND SPRING BASE ISOLATORS. CONCRETE PAD AND ANCHORING DETAILS SHALL BE SUBMITTED AS A DELEGATED-DESIGN, STAMPED BY A HAWAII LICENSED STRUCTURAL ENGINEER.

(3) MOUNT COMMON EXHAUST FAN ON MINIMUM 4" THICK CONCRETE PAD WITH FACTORY SUPPLIED MOUNTING RAILS AND SPRING BASE ISOLATORS. CONCRETE PAD AND ANCHORING DETAILS SHALL BE SUBMITTED AS A DELEGATED-DESIGN, STAMPED BY A HAWAII LICENSED STRUCTURAL ENGINEER. INSTALL DUCT STATIC PRESSURE TAP AT 11TH FLOOR FOR CONSTANT PRESSURE, VARIABLE SPEED OPERATION.

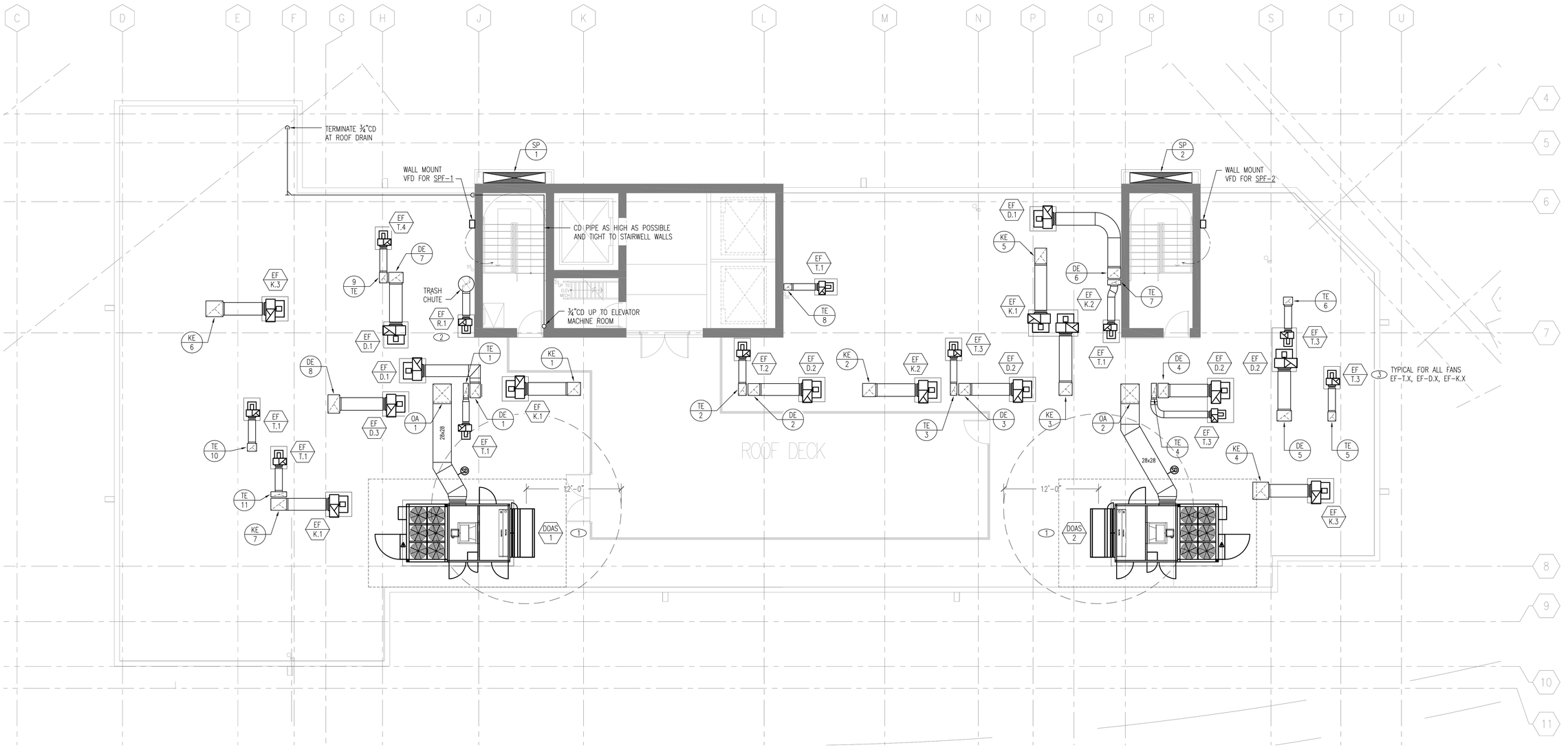

1 TOWER HVAC PLAN - ROOF DECK
SCALE: 3/16" = 1'-0"

4 2 0 4 8

CROSSLAND ENGINEERING
Big Firm Results. Small Firm Service.

ENGINEER:
THIS WORK WAS PREPARED BY ME OR UNDER MY SUPERVISION AND CONSTRUCTION OF THIS PROJECT WILL BE UNDER MY OBSERVATION.

ANDREW S. CROSSLAND
LICENSED PROFESSIONAL ENGINEER
No. 16028-M
HAWAII U.S.A.

EXPIRES: 4/30/2020

DEVELOPER:
CALIFORNIA INVESTMENT REGIONAL CENTER, LLC

PROJECT OWNER:
HAWAII CITY PLAZA, LP

Hawaii City Plaza
Honolulu, Hawaii
710 Sheridan Street
TMK 2-3-014: Parcels 002, 004, & 011

PERMIT SET

DATE 2019 MARCH 19

PROJECT # 15028-02

SHEET TITLE
TOWER HVAC PLAN - ROOF DECK

SHEET NO.
M-113

SHEET NOTES

1. CONTRACTOR SHALL ENSURE THAT SUFFICIENT CLEARANCE SPACE IS PROVIDED TO PROPERLY ACCESS ALL EQUIPMENT FOR SERVICE AND MAINTENANCE PER MANUFACTURER REQUIREMENTS.
2. ALL STRUCTURAL SUPPORTS AND SPRING ISOLATORS SHALL BE CORROSION COATED TO MEET OR EXCEED THE CORROSION AND SALT SPRAY RATING PERFORMANCE OF THE EQUIPMENT.
3. PROVIDE FLEXIBLE DUCT CONNECTION AT DUCTED INLET/OUTLET FOR EACH PIECE OF EQUIPMENT.
4. REFER TO RISER DIAGRAMS ON SHEET M-501 FOR DUCT SIZING AND CONFIGURATION OF ALL DUCTWORK WITHIN DUCT SHAFTS SHOWN ON THIS SHEET.
5. REFER TO ARCHITECTURAL DRAWINGS FOR ROOF SLOPES, DUCT SHAFT ROOF CURB, ROOF PENETRATION, FLASHING, AND WATERPROOFING DETAILS.
6. COORDINATE ALL WORK WITH ROOF WATERPROOFING CONTRACTOR AND ROOFING MATERIAL MANUFACTURER TO ENSURE INTEGRITY OF WATERPROOFING SYSTEM IS MAINTAINED.

KEY NOTES

(1) MOUNT STAIRWELL PRESSURIZATION SUPPLY FAN ON MINIMUM 4" THICK CONCRETE PAD WITH FACTORY SUPPLIED RESTRAINED SPRING BASE MOUNT ISOLATORS. CONCRETE PAD AND ANCHORING DETAILS SHALL BE SUBMITTED AS A DELEGATED-DESIGN, STAMPED BY A HAWAII LICENSED STRUCTURAL ENGINEER. MOUNT VFD TO EXTERIOR WALL.

(2) MOUNT BAROMETRIC RELIEF VENTILATOR ASSEMBLY ON FACTORY SUPPLIED ROOF CURB. USE CABLE TIE-DOWN AS NECESSARY.

(3) WATERPROOF ELEVATOR SHAFT VENTILATION LOUVER AT TOP OF ELEVATOR SHAFT. MINIMUM FREE AREA SHALL BE NOT LESS THAN 3.5% OF THE AREA OF THE HOISTWAY NOR LESS THAN 3 SQFT AND SHALL BE IN ACCORDANCE WITH SECTION 3004.3 OF 2006 IBC.

(4) INSTALL NEW FCU PER MANUFACTURER INSTRUCTIONS WITH REQUIRED SERVICE CLEARANCES. PROVIDE INTEGRAL OR FIELD-INSTALLED CONDENSATE PUMP.

(5) INSTALL NEW ACCU PER MANUFACTURER INSTRUCTIONS WITH REQUIRED SERVICE CLEARANCES. EQUIPMENT BASE SHALL BE MOUNTED AND ANCHORED TO A MINIMUM 4" THICK CONCRETE PAD. ANCHORING SYSTEM SHALL BE SUBMITTED AS A DELEGATED-DESIGN, STAMPED BY A HAWAII LICENSED STRUCTURAL ENGINEER. PROVIDE NEOPRENE WAFFLE VIBRATION ISOLATION PADS. PROVIDE JACKET OVER INSULATED REFRIGERANT PIPING LOCATED OUTDOORS; SEE SPECS.

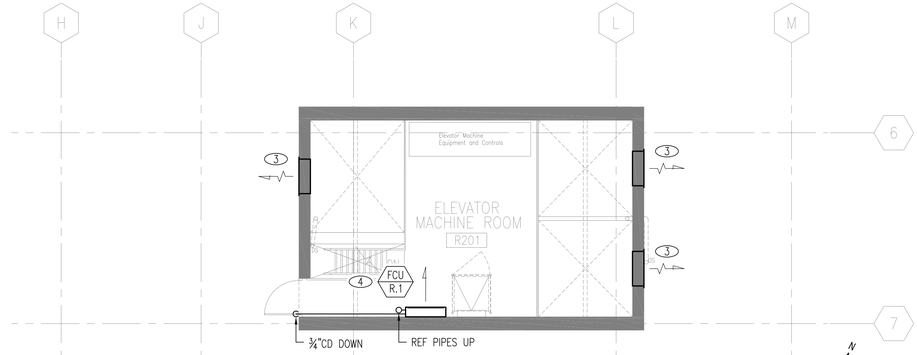

2 TOWER HVAC PLAN - ELEVATOR MACHINE ROOM
SCALE: 3/16" = 1'-0"

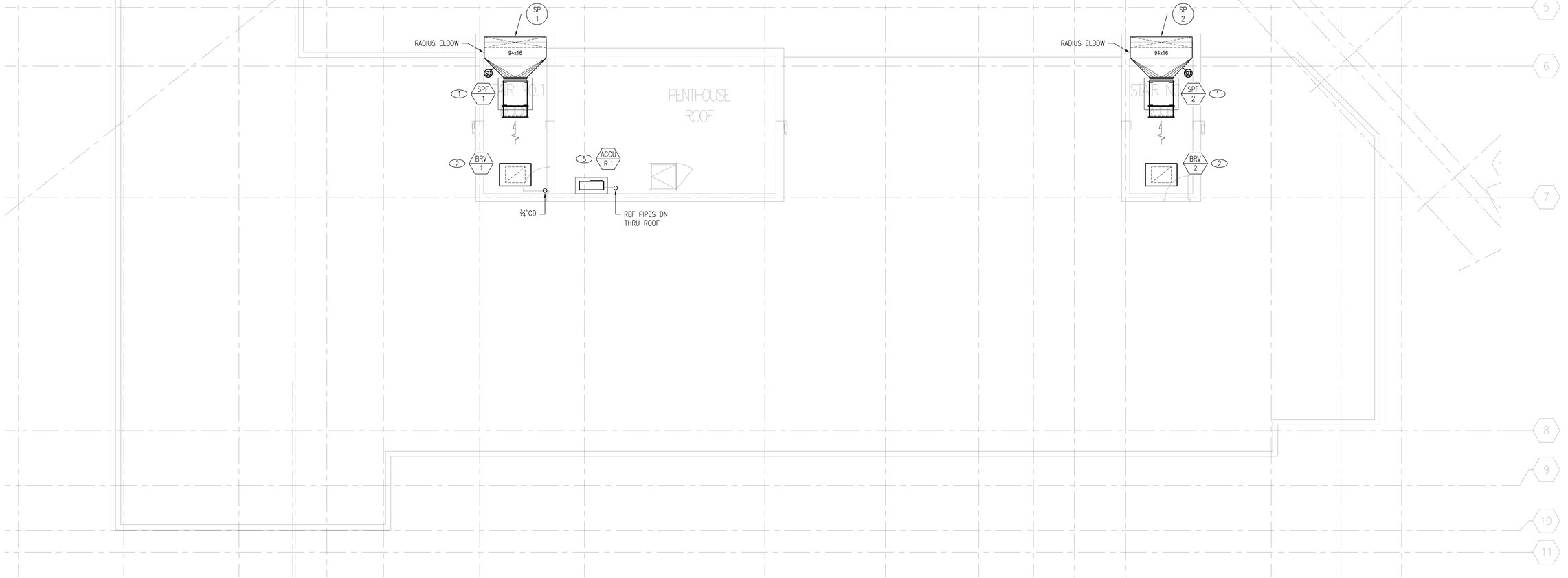

1 TOWER HVAC PLAN - PENTHOUSE ROOF
SCALE: 3/16" = 1'-0"

4 2 0 4 8

CROSSLAND ENGINEERING
Big Firm Results. Small Firm Service.

ENGINEER:
THIS WORK WAS PREPARED BY ME OR UNDER MY SUPERVISION AND CONSTRUCTION OF THIS PROJECT WILL BE UNDER MY OBSERVATION.

ANDREW S. CROSSLAND
LICENSED PROFESSIONAL ENGINEER
No. 16028-M
HAWAII U.S.A.

EXPIRES: 4/30/2020

DEVELOPER:
CALIFORNIA INVESTMENT REGIONAL CENTER, LLC

PROJECT OWNER:
HAWAII CITY PLAZA, LP

Hawaii City Plaza
Honolulu, Hawaii
710 Sheridan Street
TMK 2-3-014: Parcels 002, 004, & 011

PERMIT SET

DATE 2019 MARCH 19

PROJECT # 15028-02

SHEET TITLE
TOWER HVAC PLAN - PENTHOUSE ROOF

SHEET NO.
M-114

SHEET NOTES

1. REFER TO RISER DIAGRAMS ON SHEET M-501 FOR DUCT SIZING AND CONFIGURATION OF ALL DUCTWORK WITHIN DUCT SHAFTS SHOWN ON THIS SHEET.
2. REFRIGERANT AND CONDENSATE DRAIN PIPING SHOWN SCHEMATICALLY. PROVIDE ADJUSTMENTS AND OFFSETS WHERE NECESSARY FOR A COMPLETE INSTALLATION. CONTRACTOR SHALL CONFIRM REFRIGERANT PIPE SIZES AND ROUTING WITH EQUIPMENT MANUFACTURER.
3. COORDINATE EXACT LOCATION OF ALL THERMOSTATS WITH DEVELOPER AND ARCHITECT.
4. COORDINATE WITH OTHER TRADES FOR ALL DUCTWORK AND PIPING LOCATED WITHIN CABINETRY.
5. EACH FAN COIL UNIT HAS INTEGRAL CONDENSATE PUMP. ALL CONDENSATE DRAIN PIPING SHALL BE INSTALLED AS HIGH AS POSSIBLE.

KEY NOTES

1. INSTALL NEW FCU PER MANUFACTURER INSTRUCTIONS WITH REQUIRED SERVICE CLEARANCES. LOCATE ACCESS PANEL BENEATH FCU AND OFFSET TO ALLOW 12" ACCESS ON PIPE CONNECTION SIDE OF UNIT.
2. CONNECT 4ø SHEET METAL DRYER EXHAUST DUCT FROM MAIN EXHAUST DUCT RISER WITH 22" SUBDUCT TO GUY GRAY DB-425 DRYERBOX. CONNECT DRYER FLEX DUCT TO DEVELOPER FURNISHED DRYER AND DRYER BOX WITH STAINLESS STEEL BAND CLAMPS. COORDINATE EXACT DRYER BOX LOCATION WITH PLUMBING CONTRACTOR. DRYER EXHAUST MAXIMUM FLOW RATE SHALL BE 225 CFM.
3. PROVIDE 10x8 KITCHEN EXHAUST DUCT WITH 22" SUBDUCT AT MAIN EXHAUST DUCT RISER. CONNECT TO DEVELOPER FURNISHED KITCHEN EXHAUST HOOD WITH BACKDRAFT DAMPER. CONFIRM CONNECTION REQUIREMENTS WITH KITCHEN HOOD MANUFACTURER AND COORDINATE EXHAUST DUCT SIZE AND ROUTING WITH CABINET CONTRACTOR. KITCHEN EXHAUST MAXIMUM FLOW RATE SHALL BE 300 CFM.
4. CONNECT TOILET EXHAUST TO MAIN EXHAUST DUCT RISER WITH 22" SUBDUCT.
5. INSTALL NEW ACCU PER MANUFACTURER INSTRUCTIONS WITH REQUIRED SERVICE CLEARANCES. PROVIDE JACKET OVER INSULATED REFRIGERANT PIPING LOCATED OUTDOORS.
6. PENETRATION OF LIQUID AND GAS REFRIGERANT PIPES THROUGH BUILDING ENVELOPE SHALL BE PER ARCHITECTURAL GLAZING DETAILS.
7. CONNECT 16x6 OUTSIDE AIR DUCT TO MAIN OUTSIDE AIR DUCT RISER WITH FIRE/SMOKE DAMPER AND ACCESS PANELS AS REQUIRED. SEE SHEET M-112 FOR CONTINUATION.
8. CONNECT ¾"CD TO 1½" INSULATED CONDENSATE DRAIN RISER.

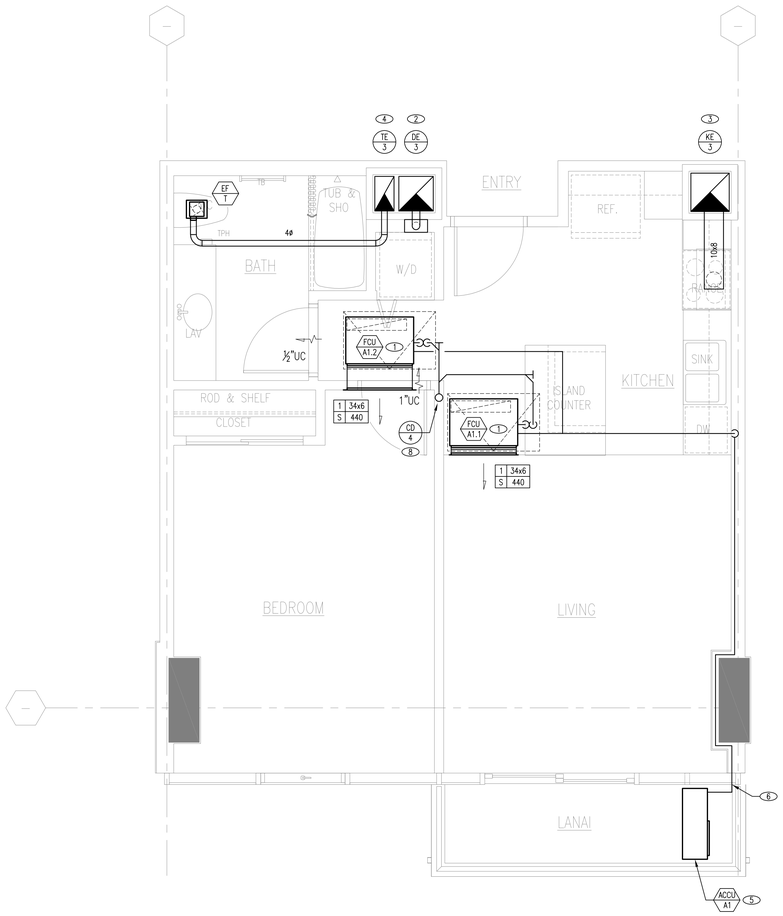

1 HVAC PLAN - UNIT A1
SCALE: 3/8" = 1'-0"

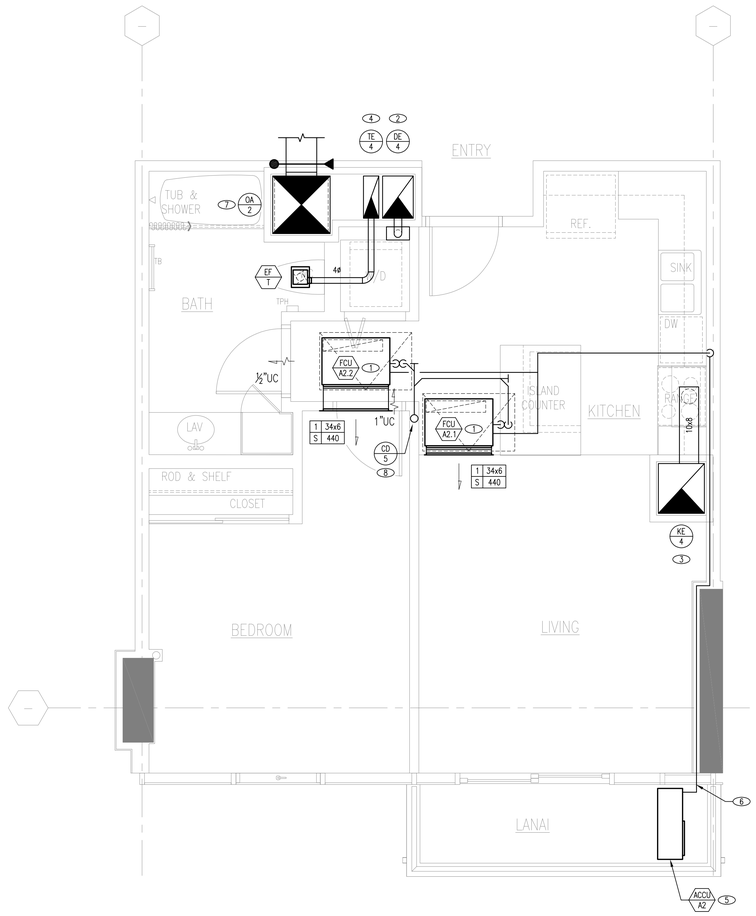

2 HVAC PLAN - UNIT A2
SCALE: 3/8" = 1'-0"

CROSSLAND ENGINEERING
Big Firm Results. Small Firm Service.
1571 Lusia Street, Honolulu, HI 96822
808.462.8484 | info@crossleng.com www.crossleng.com

ENGINEER:
THIS WORK WAS PREPARED BY ME OR UNDER MY SUPERVISION AND CONSTRUCTION OF THIS PROJECT WILL BE UNDER MY OBSERVATION.

ANDREW S. CROSSLAND
LICENSED PROFESSIONAL ENGINEER
No. 16028-M
HAWAII U.S.A.

EXPIRES: 4/30/2020

DEVELOPER:
CALIFORNIA INVESTMENT REGIONAL CENTER, LLC

PROJECT OWNER:
HAWAII CITY PLAZA, LP

Hawaii City Plaza
Honolulu, Hawaii
710 Sheridan Street
TMK 2-3-014: Parcels 002, 004, & 011

PERMIT SET

DATE 2019 MARCH 19

PROJECT # 15028-02

SHEET TITLE
ENLARGED HVAC PLAN - UNIT TYPES A1 & A2

SHEET NO.
M-201

SHEET NOTES

1. REFER TO RISER DIAGRAMS ON SHEET M-501 FOR DUCT SIZING AND CONFIGURATION OF ALL DUCTWORK WITHIN DUCT SHAFTS SHOWN ON THIS SHEET.
2. REFRIGERANT AND CONDENSATE DRAIN PIPING SHOWN SCHEMATICALLY. PROVIDE ADJUSTMENTS AND OFFSETS WHERE NECESSARY FOR A COMPLETE INSTALLATION. CONTRACTOR SHALL CONFIRM REFRIGERANT PIPE SIZES AND ROUTING WITH EQUIPMENT MANUFACTURER.
3. COORDINATE EXACT LOCATION OF ALL THERMOSTATS WITH DEVELOPER AND ARCHITECT.
4. COORDINATE WITH OTHER TRADES FOR ALL DUCTWORK AND PIPING LOCATED WITHIN CABINETRY.
5. EACH FAN COIL UNIT HAS INTEGRAL CONDENSATE PUMP. ALL CONDENSATE DRAIN PIPING SHALL BE INSTALLED AS HIGH AS POSSIBLE.

KEY NOTES

1. INSTALL NEW FCU PER MANUFACTURER INSTRUCTIONS WITH REQUIRED SERVICE CLEARANCES. LOCATE ACCESS PANEL BENEATH FCU AND OFFSET TO ALLOW 12" ACCESS ON PIPE CONNECTION SIDE OF UNIT.
2. CONNECT 4ø SHEET METAL DRYER EXHAUST DUCT FROM MAIN EXHAUST DUCT RISER WITH 22" SUBDUCT TO GUY GRAY DB-425 DRYERBOX. CONNECT DRYER FLEX DUCT TO DEVELOPER FURNISHED DRYER AND DRYER BOX WITH STAINLESS STEEL BAND CLAMPS. COORDINATE EXACT DRYER BOX LOCATION WITH PLUMBING CONTRACTOR. DRYER EXHAUST MAXIMUM FLOW RATE SHALL BE 225 CFM.
3. PROVIDE 10x8 KITCHEN EXHAUST DUCT WITH 22" SUBDUCT AT MAIN EXHAUST DUCT RISER. CONNECT TO DEVELOPER FURNISHED KITCHEN EXHAUST HOOD WITH BACKDRAFT DAMPER. CONFIRM CONNECTION REQUIREMENTS WITH KITCHEN HOOD MANUFACTURER AND COORDINATE EXHAUST DUCT SIZE AND ROUTING WITH CABINET CONTRACTOR. KITCHEN EXHAUST MAXIMUM FLOW RATE SHALL BE 300 CFM.
4. CONNECT TOILET EXHAUST TO MAIN EXHAUST DUCT RISER WITH 22" SUBDUCT.
5. INSTALL NEW ACCU PER MANUFACTURER INSTRUCTIONS WITH REQUIRED SERVICE CLEARANCES. PROVIDE JACKET OVER INSULATED REFRIGERANT PIPING LOCATED OUTDOORS.
6. PENETRATION OF LIQUID AND GAS REFRIGERANT PIPES THROUGH BUILDING ENVELOPE SHALL BE PER ARCHITECTURAL GLAZING DETAILS.
7. CONNECT 16x6 OUTSIDE AIR DUCT TO MAIN OUTSIDE AIR DUCT RISER WITH FIRE/SMOKE DAMPER AND ACCESS PANELS AS REQUIRED. SEE SHEET M-112 FOR CONTINUATION.
8. CONNECT ¾"CD TO 1½" INSULATED CONDENSATE DRAIN RISER.

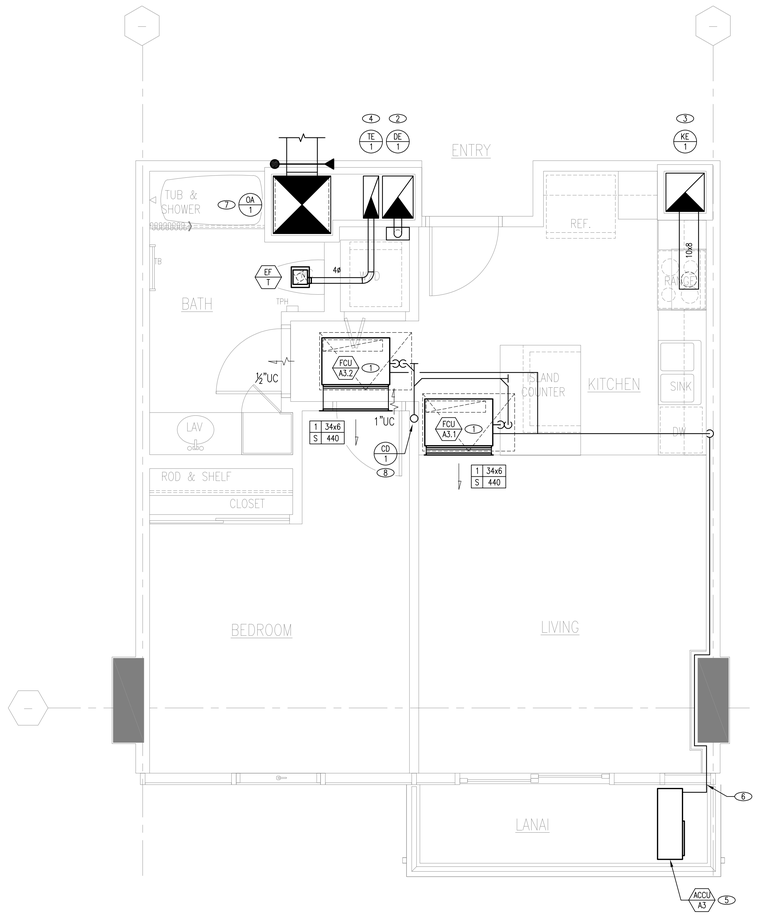

1 HVAC PLAN - UNIT A3
SCALE: 3/8" = 1'-0"

2 1 0 2 4

CROSSLAND ENGINEERING
Big Firm Results. Small Firm Service.

ENGINEER:
THIS WORK WAS PREPARED BY ME OR UNDER MY SUPERVISION AND CONSTRUCTION OF THIS PROJECT WILL BE UNDER MY OBSERVATION.

ANDREW S. CROSSLAND
LICENSED PROFESSIONAL ENGINEER
No. 16028-M
HAWAII U.S.A.

EXPIRES: 4/30/2020

DEVELOPER:
CALIFORNIA INVESTMENT REGIONAL CENTER, LLC

PROJECT OWNER:
HAWAII CITY PLAZA, LP

Hawaii City Plaza
Honolulu, Hawaii
710 Sheridan Street
TMK 2-3-014: Parcels 002, 004, & 011

PERMIT SET

DATE 2019 MARCH 19

PROJECT # 15028-02

SHEET TITLE
ENLARGED HVAC PLAN - UNIT TYPES A3

SHEET NO.
M-202

SHEET NOTES

1. REFER TO RISER DIAGRAMS ON SHEET M-501 FOR DUCT SIZING AND CONFIGURATION OF ALL DUCTWORK WITHIN DUCT SHAFTS SHOWN ON THIS SHEET.
2. REFRIGERANT AND CONDENSATE DRAIN PIPING SHOWN SCHEMATICALLY. PROVIDE ADJUSTMENTS AND OFFSETS WHERE NECESSARY FOR A COMPLETE INSTALLATION. CONTRACTOR SHALL CONFIRM REFRIGERANT PIPE SIZES AND ROUTING WITH EQUIPMENT MANUFACTURER.
3. COORDINATE EXACT LOCATION OF ALL THERMOSTATS WITH DEVELOPER AND ARCHITECT.
4. COORDINATE WITH OTHER TRADES FOR ALL DUCTWORK AND PIPING LOCATED WITHIN CABINETRY.
5. EACH FAN COIL UNIT HAS INTEGRAL CONDENSATE PUMP. ALL CONDENSATE DRAIN PIPING SHALL BE INSTALLED AS HIGH AS POSSIBLE.

KEY NOTES

1. INSTALL NEW FCU PER MANUFACTURER INSTRUCTIONS WITH REQUIRED SERVICE CLEARANCES. LOCATE ACCESS PANEL BENEATH FCU AND OFFSET TO ALLOW 12" ACCESS ON PIPE CONNECTION SIDE OF UNIT.
2. CONNECT 4ø SHEET METAL DRYER EXHAUST DUCT FROM MAIN EXHAUST DUCT RISER WITH 22" SUBDUCT TO GUY GRAY DB-425 DRYERBOX. CONNECT DRYER FLEX DUCT TO DEVELOPER FURNISHED DRYER AND DRYER BOX WITH STAINLESS STEEL BAND CLAMPS. COORDINATE EXACT DRYER BOX LOCATION WITH PLUMBING CONTRACTOR. DRYER EXHAUST MAXIMUM FLOW RATE SHALL BE 225 CFM.
3. PROVIDE 10x8 KITCHEN EXHAUST DUCT WITH 22" SUBDUCT AT MAIN EXHAUST DUCT RISER. CONNECT TO DEVELOPER FURNISHED KITCHEN EXHAUST HOOD WITH BACKDRAFT DAMPER. CONFIRM CONNECTION REQUIREMENTS WITH KITCHEN HOOD MANUFACTURER AND COORDINATE EXHAUST DUCT SIZE AND ROUTING WITH CABINET CONTRACTOR. KITCHEN EXHAUST MAXIMUM FLOW RATE SHALL BE 300 CFM.
4. CONNECT TOILET EXHAUST TO MAIN EXHAUST DUCT RISER WITH 22" SUBDUCT.
5. INSTALL NEW ACCU PER MANUFACTURER INSTRUCTIONS WITH REQUIRED SERVICE CLEARANCES. PROVIDE JACKET OVER INSULATED REFRIGERANT PIPING LOCATED OUTDOORS.
6. PENETRATION OF LIQUID AND GAS REFRIGERANT PIPES THROUGH BUILDING ENVELOPE SHALL BE PER ARCHITECTURAL GLAZING DETAILS.
7. CONNECT ¾"CD TO 1½" INSULATED CONDENSATE DRAIN RISER.

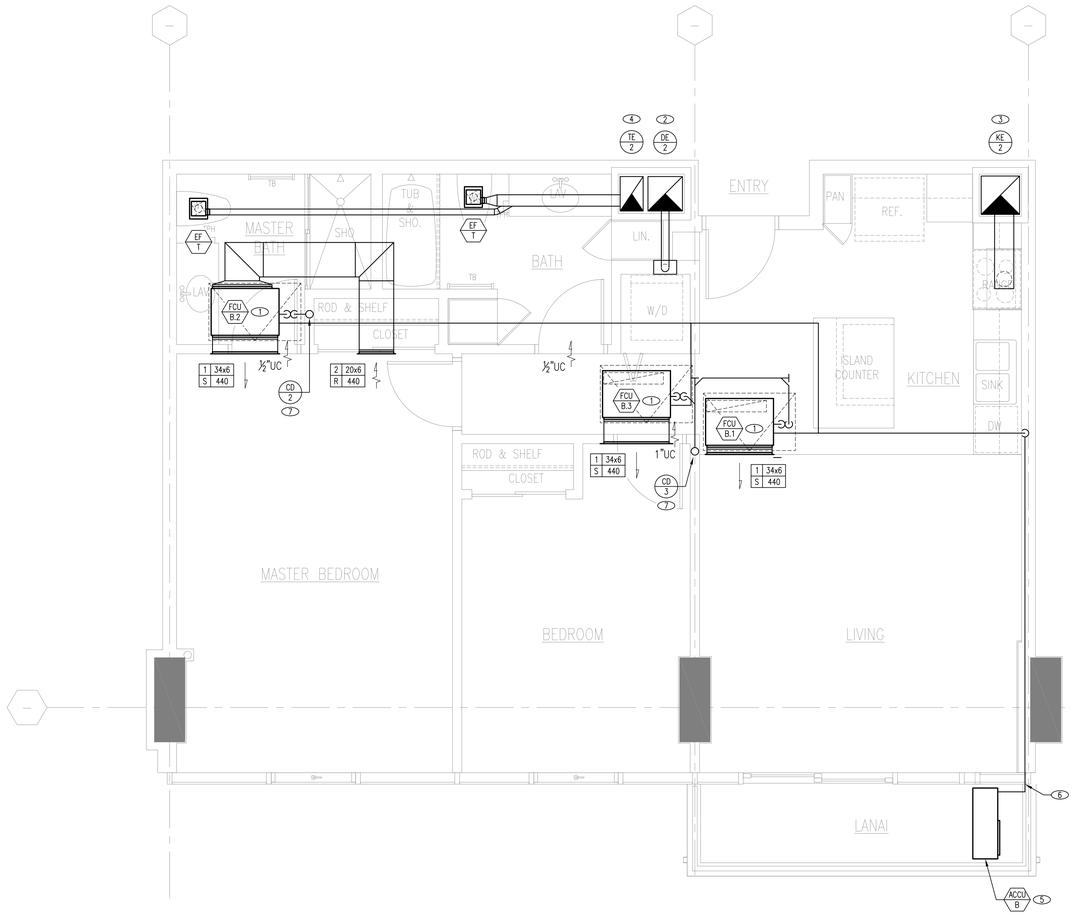

1 HVAC PLAN - UNIT B
SCALE: 3/8" = 1'-0"

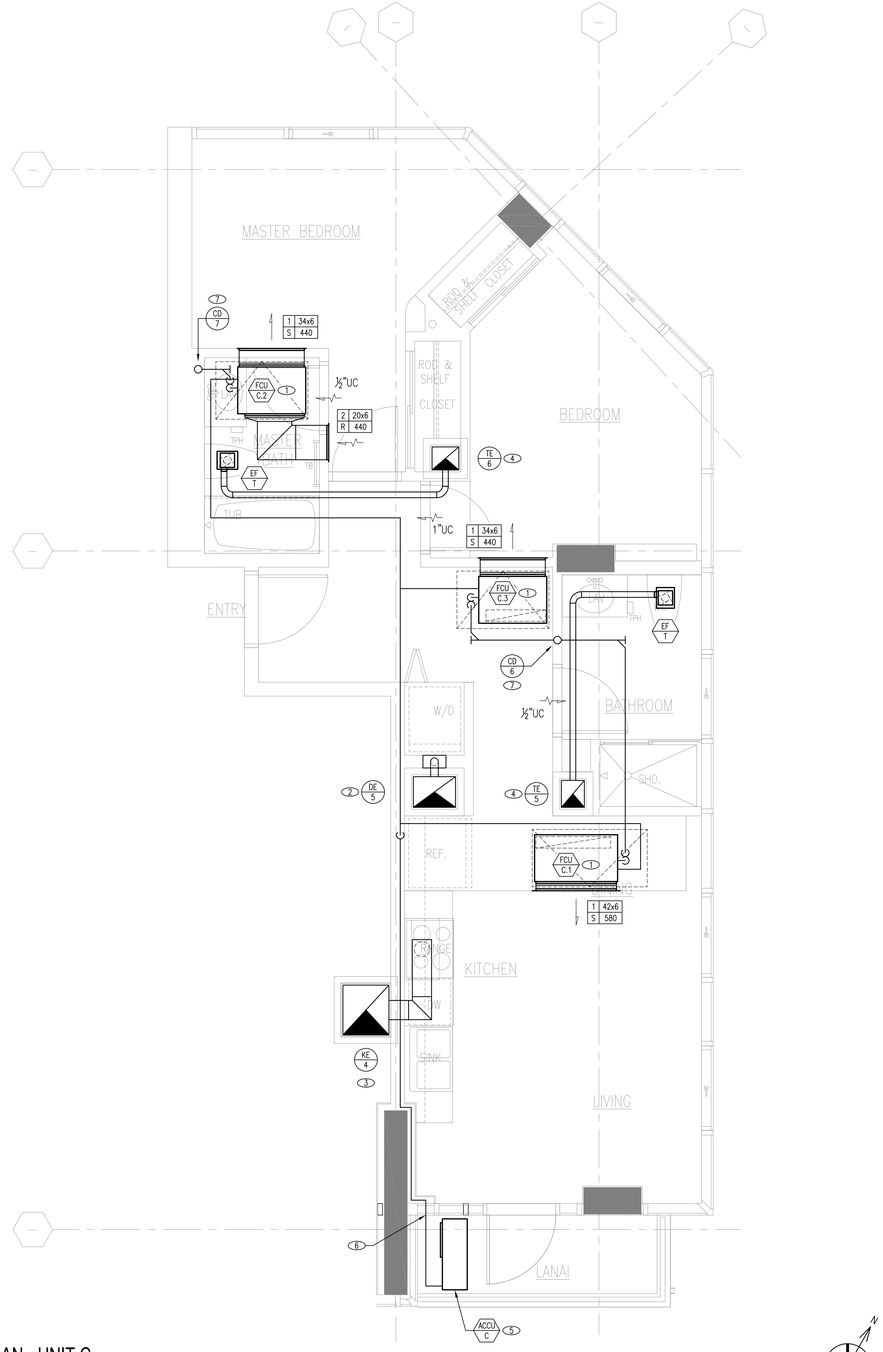

2 HVAC PLAN - UNIT C
SCALE: 3/8" = 1'-0"

CROSSLAND ENGINEERING
Big Firm Results. Small Firm Service.

ENGINEER:
THIS WORK WAS PREPARED BY ME OR UNDER MY SUPERVISION AND CONSTRUCTION OF THIS PROJECT WILL BE UNDER MY OBSERVATION.

ANDREW S. CROSSLAND
LICENSED PROFESSIONAL ENGINEER
No. 16028-M
HAWAII U.S.A.

EXPIRES: 4/30/2020

DEVELOPER:
CALIFORNIA INVESTMENT REGIONAL CENTER, LLC

PROJECT OWNER:
HAWAII CITY PLAZA, LP

Hawaii City Plaza
Honolulu, Hawaii
710 Sheridan Street
TMK 2-3-014: Parcels 002, 004, & 011

PERMIT SET

DATE 2019 MARCH 19

PROJECT # 15028-02

SHEET TITLE
ENLARGED HVAC PLAN - UNIT TYPES B & C

SHEET NO.
M-203

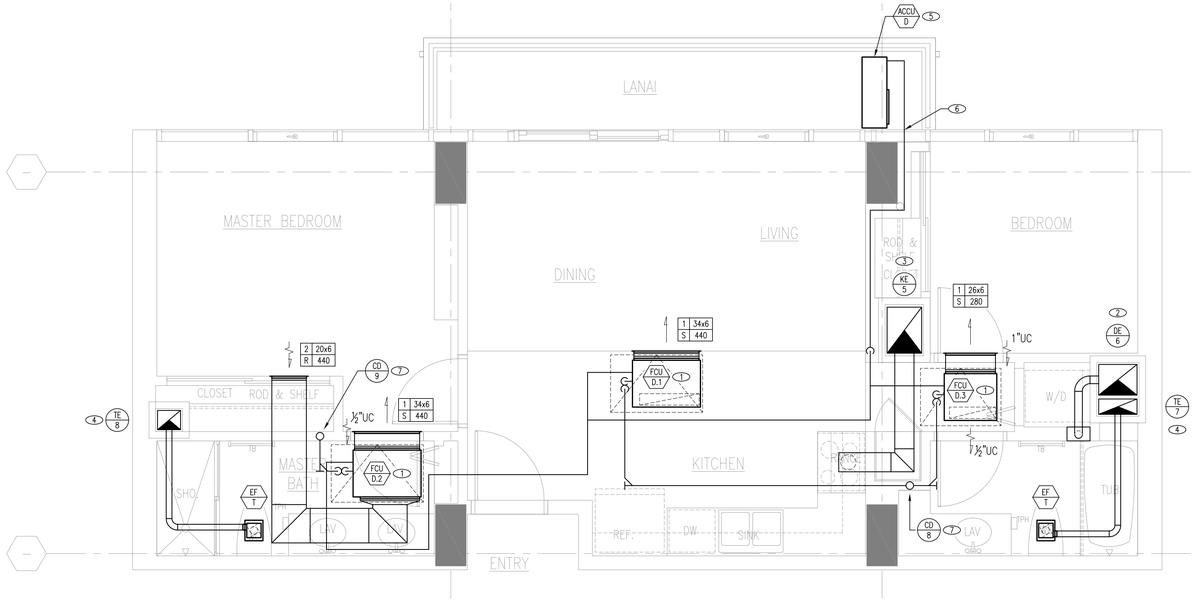

1 HVAC PLAN - UNIT D
SCALE: 3/8" = 1'-0"

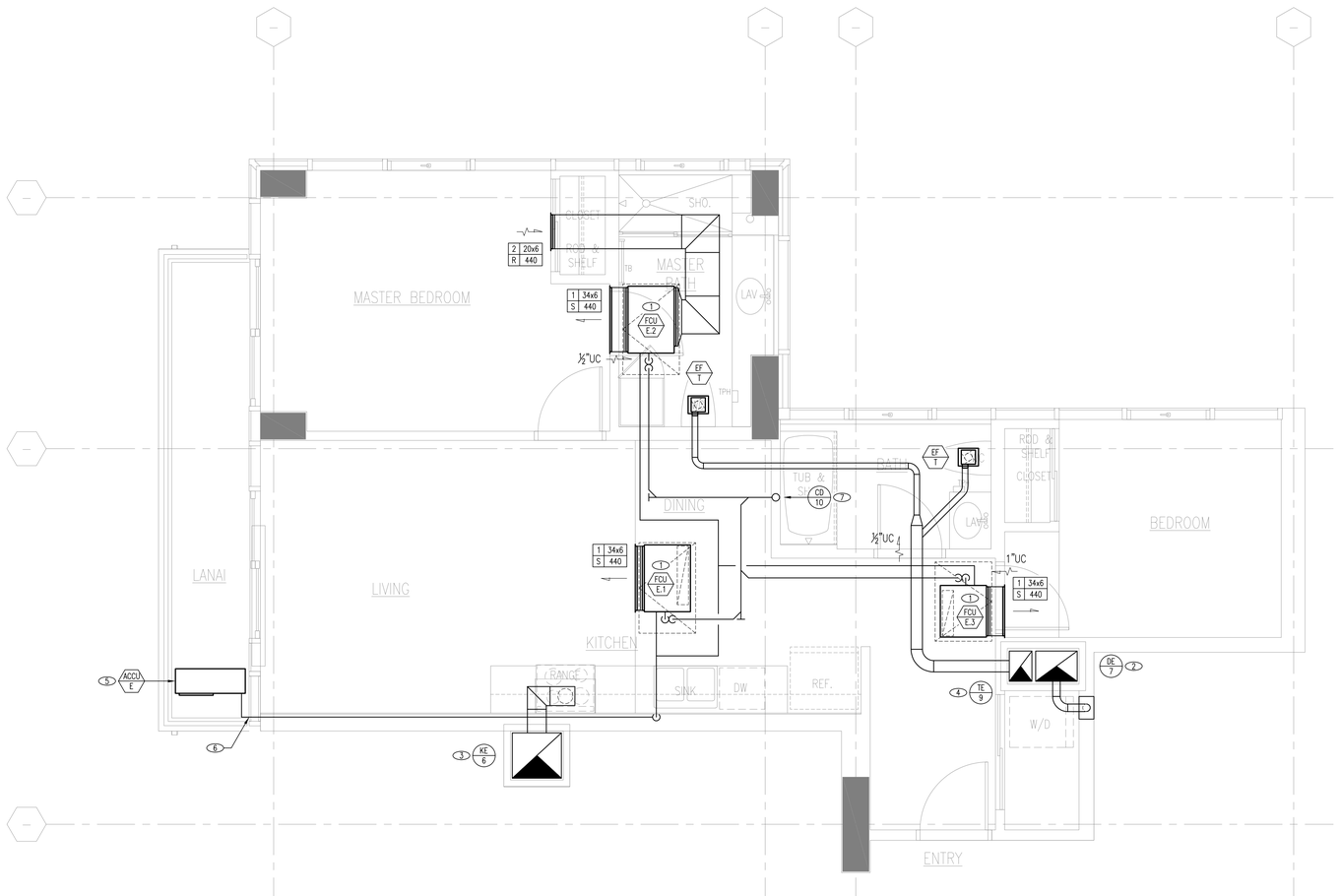

2 HVAC PLAN - UNIT E
SCALE: 3/8" = 1'-0"

SHEET NOTES

1. REFER TO RISER DIAGRAMS ON SHEET M-501 FOR DUCT SIZING AND CONFIGURATION OF ALL DUCTWORK WITHIN DUCT SHAFTS SHOWN ON THIS SHEET.
2. REFRIGERANT AND CONDENSATE DRAIN PIPING SHOWN SCHEMATICALLY. PROVIDE ADJUSTMENTS AND OFFSETS WHERE NECESSARY FOR A COMPLETE INSTALLATION. CONTRACTOR SHALL CONFIRM REFRIGERANT PIPE SIZES AND ROUTING WITH EQUIPMENT MANUFACTURER.
3. COORDINATE EXACT LOCATION OF ALL THERMOSTATS WITH DEVELOPER AND ARCHITECT.
4. COORDINATE WITH OTHER TRADES FOR ALL DUCTWORK AND PIPING LOCATED WITHIN CABINETRY.
5. EACH FAN COIL UNIT HAS INTEGRAL CONDENSATE PUMP. ALL CONDENSATE DRAIN PIPING SHALL BE INSTALLED AS HIGH AS POSSIBLE.

KEY NOTES

1. INSTALL NEW FCU PER MANUFACTURER INSTRUCTIONS WITH REQUIRED SERVICE CLEARANCES. LOCATE ACCESS PANEL BENEATH FCU AND OFFSET TO ALLOW 12" ACCESS ON PIPE CONNECTION SIDE OF UNIT.
2. CONNECT 4ø SHEET METAL DRYER EXHAUST DUCT FROM MAIN EXHAUST DUCT RISER WITH 22" SUBDUCT TO GUY GRAY DB-425 DRYERBOX. CONNECT DRYER FLEX DUCT TO DEVELOPER FURNISHED DRYER AND DRYER BOX WITH STAINLESS STEEL BAND CLAMPS. COORDINATE EXACT DRYER BOX LOCATION WITH PLUMBING CONTRACTOR. DRYER EXHAUST MAXIMUM FLOW RATE SHALL BE 225 CFM.
3. PROVIDE 10x8 KITCHEN EXHAUST DUCT WITH 22" SUBDUCT AT MAIN EXHAUST DUCT RISER. CONNECT TO DEVELOPER FURNISHED KITCHEN EXHAUST HOOD WITH BACKDRAFT DAMPER. CONFIRM CONNECTION REQUIREMENTS WITH KITCHEN HOOD MANUFACTURER AND COORDINATE EXHAUST DUCT SIZE AND ROUTING WITH CABINET CONTRACTOR. KITCHEN EXHAUST MAXIMUM FLOW RATE SHALL BE 300 CFM.
4. CONNECT TOILET EXHAUST TO MAIN EXHAUST DUCT RISER WITH 22" SUBDUCT.
5. INSTALL NEW ACCU PER MANUFACTURER INSTRUCTIONS WITH REQUIRED SERVICE CLEARANCES. PROVIDE JACKET OVER INSULATED REFRIGERANT PIPING LOCATED OUTDOORS.
6. PENETRATION OF LIQUID AND GAS REFRIGERANT PIPES THROUGH BUILDING ENVELOPE SHALL BE PER ARCHITECTURAL GLAZING DETAILS.
7. CONNECT ¾"CD TO 1½" INSULATED CONDENSATE DRAIN RISER.

CROSSLAND ENGINEERING
Big Firm Results. Small Firm Service.
1571 Lusk Street, Honolulu, HI 96822
808.462.8484 | info@crossland-eng.com www.crossland-eng.com

ENGINEER:
THIS WORK WAS PREPARED BY ME OR UNDER MY SUPERVISION AND CONSTRUCTION OF THIS PROJECT WILL BE UNDER MY OBSERVATION.

ANDREW S. CROSSLAND
LICENSED PROFESSIONAL ENGINEER
No. 16028-M
HAWAII U.S.A.

EXPIRES: 4/30/2020

DEVELOPER:
CALIFORNIA INVESTMENT REGIONAL CENTER, LLC

PROJECT OWNER:
HAWAII CITY PLAZA, LP

Hawaii City Plaza
Honolulu, Hawaii
710 Sheridan Street
TMK 2-3-014: Parcels 002, 004, & 011

PERMIT SET

DATE 2019 MARCH 19

PROJECT # 15028-02

SHEET TITLE
ENLARGED HVAC PLAN - UNIT TYPES D & E

SHEET NO.
M-204

SHEET NOTES

1. REFER TO RISER DIAGRAMS ON SHEET M-501 FOR DUCT SIZING AND CONFIGURATION OF ALL DUCTWORK WITHIN DUCT SHAFTS SHOWN ON THIS SHEET.
2. REFRIGERANT AND CONDENSATE DRAIN PIPING SHOWN SCHEMATICALLY. PROVIDE ADJUSTMENTS AND OFFSETS WHERE NECESSARY FOR A COMPLETE INSTALLATION. CONTRACTOR SHALL CONFIRM REFRIGERANT PIPE SIZES AND ROUTING WITH EQUIPMENT MANUFACTURER.
3. COORDINATE EXACT LOCATION OF ALL THERMOSTATS WITH DEVELOPER AND ARCHITECT.
4. COORDINATE WITH OTHER TRADES FOR ALL DUCTWORK AND PIPING LOCATED WITHIN CABINETRY.
5. EACH FAN COIL UNIT HAS INTEGRAL CONDENSATE PUMP. ALL CONDENSATE DRAIN PIPING SHALL BE INSTALLED AS HIGH AS POSSIBLE.

KEY NOTES

1. INSTALL NEW FCU PER MANUFACTURER INSTRUCTIONS WITH REQUIRED SERVICE CLEARANCES. LOCATE ACCESS PANEL BENEATH FCU AND OFFSET TO ALLOW 12" ACCESS ON PIPE CONNECTION SIDE OF UNIT.
2. CONNECT 4ø SHEET METAL DRYER EXHAUST DUCT FROM MAIN EXHAUST DUCT RISER WITH 22" SUBDUCT TO GUY GRAY DB-425 DRYERBOX. CONNECT DRYER FLEX DUCT TO DEVELOPER FURNISHED DRYER AND DRYER BOX WITH STAINLESS STEEL BAND CLAMPS. COORDINATE EXACT DRYER BOX LOCATION WITH PLUMBING CONTRACTOR. DRYER EXHAUST MAXIMUM FLOW RATE SHALL BE 225 CFM.
3. PROVIDE 10x8 KITCHEN EXHAUST DUCT WITH 22" SUBDUCT AT MAIN EXHAUST DUCT RISER. CONNECT TO DEVELOPER FURNISHED KITCHEN EXHAUST HOOD WITH BACKDRAFT DAMPER. CONFIRM CONNECTION REQUIREMENTS WITH KITCHEN HOOD MANUFACTURER AND COORDINATE EXHAUST DUCT SIZE AND ROUTING WITH CABINET CONTRACTOR. KITCHEN EXHAUST MAXIMUM FLOW RATE SHALL BE 300 CFM.
4. CONNECT TOILET EXHAUST TO MAIN EXHAUST DUCT RISER WITH 22" SUBDUCT.
5. INSTALL NEW ACCU PER MANUFACTURER INSTRUCTIONS WITH REQUIRED SERVICE CLEARANCES. PROVIDE JACKET OVER INSULATED REFRIGERANT PIPING LOCATED OUTDOORS.
6. PENETRATION OF LIQUID AND GAS REFRIGERANT PIPES THROUGH BUILDING ENVELOPE SHALL BE PER ARCHITECTURAL GLAZING DETAILS.
7. CONNECT ¾"CD TO 1½" INSULATED CONDENSATE DRAIN RISER.

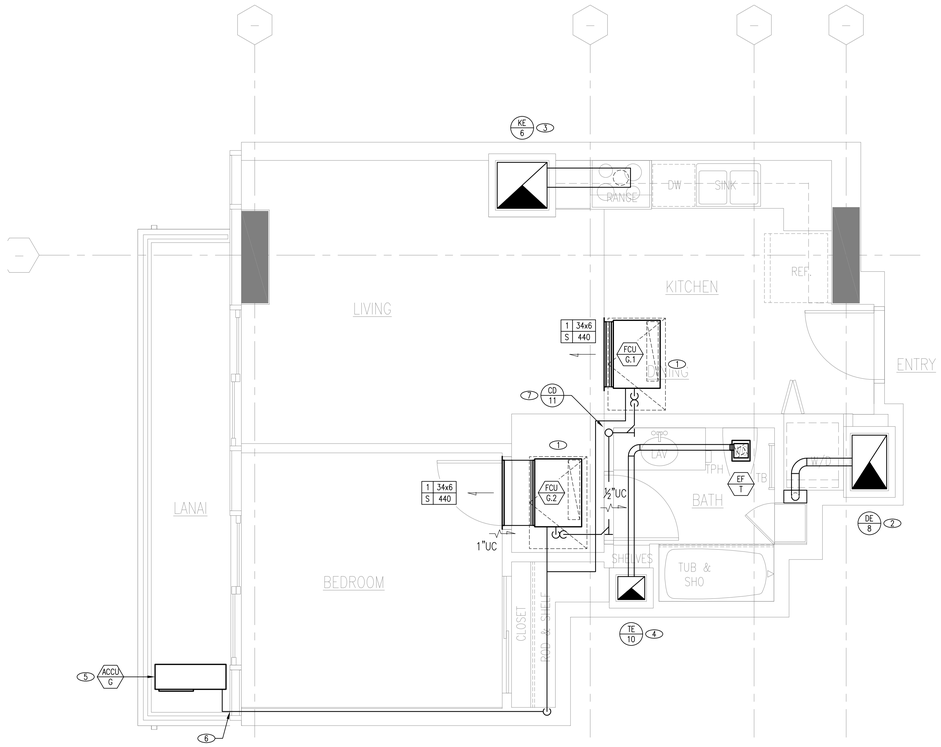

1 HVAC PLAN - UNIT G
SCALE: 3/8" = 1'-0"

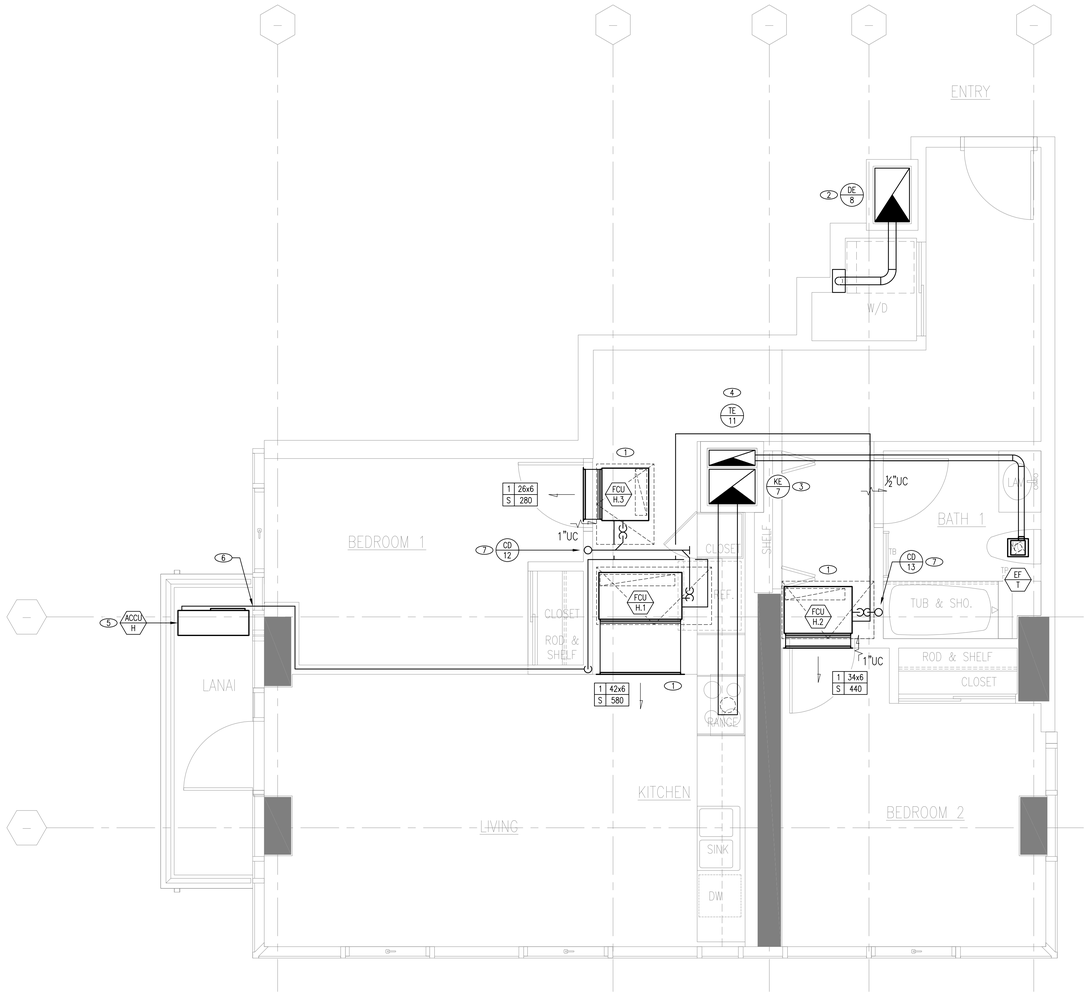

2 HVAC PLAN - UNIT H
SCALE: 3/8" = 1'-0"

CROSSLAND ENGINEERING
Big Firm Results. Small Firm Service.

ENGINEER:
THIS WORK WAS PREPARED BY ME OR UNDER MY SUPERVISION AND CONSTRUCTION OF THIS PROJECT WILL BE UNDER MY OBSERVATION.

ANDREW S. CROSSLAND
LICENSED PROFESSIONAL ENGINEER
No. 16028-M
HAWAII U.S.A.

EXPIRES: 4/30/2020

DEVELOPER:
CALIFORNIA INVESTMENT REGIONAL CENTER, LLC

PROJECT OWNER:
HAWAII CITY PLAZA, LP

Hawaii City Plaza
Honolulu, Hawaii
710 Sheridan Street
TMK 2-3-014: Parcels 002, 004, & 011

PERMIT SET

DATE 2019 MARCH 19

PROJECT # 15028-02

SHEET TITLE
ENLARGED HVAC PLAN - UNIT TYPES G & H

SHEET NO.
M-205

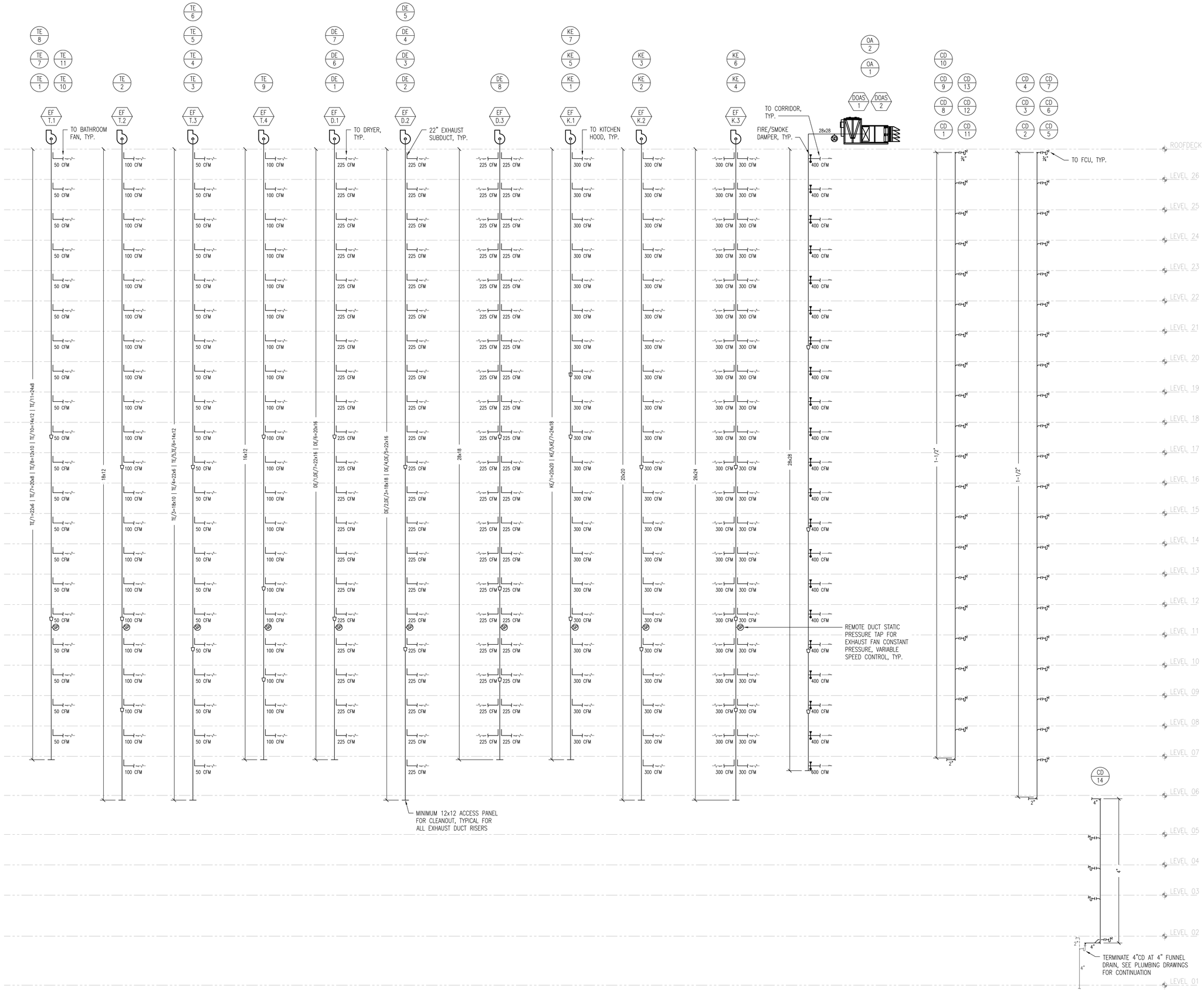

1 HVAC RISER DIAGRAMS
SCALE: NOT TO SCALE

CROSSLAND ENGINEERING
Big Firm Results. Small Firm Service.

ENGINEER:
THIS WORK WAS PREPARED BY ME OR UNDER MY SUPERVISION AND CONSTRUCTION OF THIS PROJECT WILL BE UNDER MY OBSERVATION.

ANDREW S. CROSSLAND
LICENSED PROFESSIONAL ENGINEER
No. 16028-M
HAWAII U.S.A.

EXPIRES: 4/30/2020

DEVELOPER:
CALIFORNIA INVESTMENT REGIONAL CENTER, LLC

PROJECT OWNER:
HAWAII CITY PLAZA, LP

Hawaii City Plaza
Honolulu, Hawaii
710 Sheridan Street
TMK 2-3-014: Parcels 002, 004, & 011

PERMIT SET

DATE 2019 MARCH 19

PROJECT # 15028-02

SHEET TITLE
HVAC RISER DIAGRAMS

SHEET NO.
M-501

CORRIDOR FIRE/SMOKE DAMPER SEQUENCE OF OPERATIONS

1. ALL FIRE/SMOKE DAMPERS SHALL INTERFACE WITH THE BUILDING FIRE ALARM SYSTEM AND SHALL BE SUPERVISED AND MONITORED BY THE BUILDING FIRE ALARM SYSTEM.

2. EACH FLOOR SHALL BE ONE SMOKE ZONE. SMOKE DETECTORS ARE PROVIDED THROUGHOUT EACH SMOKE ZONE; SEE FIRE ALARM DRAWINGS IN ELECTRICAL SET.

3. EACH FIRE/SMOKE DAMPER SHALL HAVE AN INTEGRAL DUCT SMOKE DETECTOR AND THE DAMPER ACTUATOR SHALL CLOSE THE DAMPER IF SMOKE IS DETECTED BY THE SMOKE DETECTOR. THE DAMPER SHALL REMAIN AT THE CLOSED POSITION AND AN ALARM SIGNAL SHALL BE SENT TO THE FIRE ALARM SYSTEM.

4. ADDITIONALLY, THE DAMPER ACTUATOR SHALL CLOSE THE DAMPER AND REMAIN CLOSED WHEN ANY OF THE FOLLOWING CONDITIONS OCCUR:

   a. SMOKE IS DETECTED BY AT LEAST ONE SMOKE DETECTOR WITHIN THE SAME SMOKE ZONE
   b. ACTIVATION OF FIRE SPRINKLER WATER FLOW
   c. FIRE ALARM OR DAMPER TESTING
   d. POWER FAILURE

5. THE DAMPER SHALL AUTOMATICALLY RESET TO THE OPEN POSITION WHEN:

   a. SMOKE SIGNAL CEASES (VIA SMOKE DETECTOR RESET)
   b. FIRE ALARM OR DAMPER TESTING IS COMPETED
   c. POWER IS RESTORED

6. THE FIRE/SMOKE DAMPER SHALL AUTOMATICALLY RESET IF NUISSANCE ALARMS OCCUR AND THE BUILDING FIRE ALARM SYSTEM IS RESET.

STAIRWELL PRESSURIZATION SEQUENCE OF OPERATIONS

1. GENERAL

   a. A STAND ALONE STAIRWELL PRESSURIZATION CONTROL SYSTEM SHALL BE DESIGNED, INSTALLED, AND OPERATED IN ACCORDNCE WITH NFPA 92.

   b. THE STAND ALONE SMOKE CONTROL SYSTEM SHALL BE FURNISHED BY THE MECHANICAL CONTRACTOR AND THE MECHANICAL CONTRACTOR SHALL BE RESPONSIBLE FOR COORDINATING WITH THE TESTING, ADJUSTING, AND BALANCING (TAB) CONTRACTOR, FIRE ALARM SYSTEM CONTRACTOR, AND OTHER TRADES TO ENSURE THAT THE SYSTEM IS INSTALLED AND FUNCTIONS PER NFPA 92A.

   c. THE STAND ALONE SMOKE CONTROL SYSTEM SHALL COORDINATE THE SMOKE CONTROL FUNCTIONS INITIATED BY A SIGNAL FROM THE FIRE ALARM SYSTEM, THE FIRE FIGHTERS' SMOKE CONTROL STATION, AND ANY OTHER RELATED SYSTEMS WITH THE OPERATION OF THE BUILDING HVAC SYSTEMS AND DEDICATED SMOKE CONTROL EQUIPMENT.

   d. A FIRE FIGHTERS' SMOKE CONTROL STATION (FSCS) SHALL BE PROVIDED AND INSTALLED INSIDE THE DEDICATED FIRE CONTROL CENTER ROOM ON THE GROUND FLOOR OF THE BUILDING.

   e. THE FSCS SHALL PROVIDE STATUS INDICATION, FAULT CONDITION INDICATION, AND MANUAL CONTROL OF ALL STAIRWELL PRESSURIZATION SYSTEM COMPONENTS.

   f. THE PRESSURE DIFFERENCE BETWEEN THE SMOKE ZONE AND THE STAIRWELL SHALL NOT BE LESS THAN 0.05" W.G. AND NOT GREATER THAN 0.35" W.G.

   g. STAIRWELL PRESSURIZATION SYSTEMS SHALL BE AUTOMATICALLY ACTIVATED BY SMOKE DETECTORS THAT SHALL BE INSTALLED AT AN APPROVED LOCATION ON EACH FLOOR LEVEL AT THE ENTRANCE TO THE SMOKEPROOF ENCLOSURE. MANUAL ACTIVATION AND DEACTIVATION CONTROL OF THE STAIRWELL PRESSURIZATION SYSTEMS SHALL BE PROVIDED AT THE FSCS.

2. STAIRWELL PRESSURIZATION FANS

   a. A DUCT SMOKE DETECTOR SHALL BE PROVIDED IN THE SUPPLY AIR DUCT (IMMEDIATELY DOWNSTREAM OF EACH FAN) BEFORE ENTERING EACH OF THE PRESSURIZED STAIRWELL DUCT SHAFTS. UPON DETECTION OF SMOKE IN THE AIR SUPPLY, THE ASSOCIATED SUPPLY FAN SHALL BE STOPPED. AN ALARM SIGNAL SHALL BE TRANSMITTED TO THE FIRE ALARM SYSTEM.

   b. THE FAN VFD'S SHALL REPORT POWER STATUS AND FAN RUN STATUS TO THE FIRE ALARM SYSTEM AND FAN RUN STATUS TO THE FIRE FIGHTERS' SMOKE CONTROL STATION.

   c. A DIFFERENTIAL PRESSURE TRANSMITTER SHALL BE TAPPED TO THE INTAKE AND DISCHARGE DUCTS OF EACH STAIRWELL PRESSURIZATION FAN AND REPORT DEVICE STATUS AND AIR FLOW STATUS TO THE FIRE ALARM SYSTEM AND AIR FLOW STATUS TO THE FIRE FIGHTERS' SMOKE CONTROL STATION.

3. BAROMETRIC RELIEF VENTILATOR

   a. THE BAROMETRIC DAMPER AT THE TOP OF EACH STAIRWELL SHALL BE SET TO RELIEF 2,500 CFM OF AIR @ 0.25" W.G. FROM EACH STAIRWELL AT THE MAXIMUM OPERATING STAIRWELL PRESSURE. ADJUST AIRFLOW AND RELIEF PRESSURE AS DETERMINED BY THE STAIRWELL PRESSURIZATION SYSTEM TAB PROCEDURES.

4. FIRE FIGHTERS' SMOKE CONTROL STATION

   a. THE SPF "ON-AUTO-OFF" CONTROL SWITCHES FOR VARIABLE VOLUME FANS WITH CORRESPONDING STATUS INDICATOR LIGHTS LOCATED ON THE FSCS SHALL OVERRIDE THE FIRE ALARM SYSTEM INTERLOCK AND ALL OTHER FAN SWITCHES FOR EACH RESPECTIVE SPF. THE "ON" POSITION SHALL OVERRIDE THE VFD CONTROL AND RUN THE FAN AT A SPEED TO BE DETERMINED DURING THE STAIRWELL PRESSURIZATION SYSTEM TAB PROCEDURES.

   b. THE SPF "ON-AUTO-OFF" CONTROL SWITCHES FOR CONSTANT VOLUME FANS WITH CORRESPONDING STATUS INDICATOR LIGHTS LOCATED ON THE FSCS SHALL OVERRIDE THE FIRE ALARM SYSTEM INTERLOCK AND ALL OTHER FAN SWITCHES FOR THE SPF.

   c. STATUS INDICATOR LIGHTS ON THE FSCS SHALL SHOW EACH SPF RUN STATUS AS FOLLOWS:

      - ON/AUTO – GREEN
      - OFF – RED
      - FAULT – YELLOW (WHERE A FAULT OCCURS WITH LOSS OF POWER TO SPF IN ANY PHASE WITH NO AIRFLOW WHEN SPF SWITCH IS IN THE "ON" POSITION OR IN "AUTO" POSITION DURING FIRE ALARM SYSTEM ALARM CONDITION.

   d. AIRFLOW INDICATOR LIGHTS SHALL SHOW AIRFLOW IN SPF DISCHARGE DUCTS AS FOLLOWS:

      - AIRFLOW – GREEN
      - NO AIRFLOW – RED

   e. LOSS OF POWER TO ANY SPF MUST RESULT IN A SUPERVISORY SIGNAL BEING SENT TO THE BUILDING FIRE ALARM SYSTEM.

5. ACCEPTANCE TESTING

   a. THE STAIRWELL PRESSURIZATION SYSTEMS SHALL BE TESTED BY A SPECIAL INSPECTOR IN ACCORDANCE WITH SECTION 1704.14 OF THE IBC.

   b. THE MECHANICAL CONTRACTOR SHALL BE SOLELY RESPONSIBLE FOR PROVIDING AND COORDINATING ACCEPTANCE TESTING OF THE STAIRWELL PRESSURIZATION SYSTEMS.

   c. THE MECHANICAL CONTRACTOR SHALL EMPLOY A TABB, NEBB, OR AABC CERTIFIED TEST, ADJUST, AND BALANCE COMPANY TO PERFORM TAB PROCEDURES ON ALL STAIRWELL PRESSURIZATION SYSTEMS. THE TAB CONTRACTOR SHALL PROVIDE A FINAL REPORT OF ALL READINGS AND MEASUREMENTS ACCORDING TO TABB, NEBB, OR AABC STANDARDS. HE SHALL SUBMIT AN ELECTRONIC COPY OF THE REPORT TO THE ENGINEER FOR REVIEW AND APPROVAL VERIFYING PROPER SYSTEM OPERATION.

   d. THE FIRE ALARM SYSTEM CONTRACTOR AND AN INDEPENDENT TAB CONTRACTOR SHALL WORK TOGETHER AND COORDINATE WITH THE MECHANICAL CONTRACTOR TO VERIFY THE OPERATION OF THE STAIRWELL PRESSURIZATION SYSTEM IN RESPONSE TO SIGNALS FROM THE FIRE ALARM DEVICES AND FIRE ALARM SYSTEM IN ACCORDANCE WITH THE REQUIREMENTS OF THE INTERNATIONAL BUILDING CODE.

   e. THE ACCEPTANCE TEST SHALL INCLUDE, BUT IS NOT LIMITED TO:

      - VERIFICATION OF AIRFLOW IN BOTH MINIMUM AND MAXIMUM FLOW CONDITIONS.
      - DUCT TRAVERSE AIRFLOW MEASUREMENTS TO VERIFY ACTUAL AIR QUANTITIES.
      - ADJUST AND BALANCE AIRFLOW TERMINALS TO THE AIR QUANTITIES SHOWN ON THIS SHEET.
      - EXAMINE FAN FOR CORRECT ROTATION DIRECTION.
      - MEASURE FAN MOTOR VOLTAGE, AMPERAGE, RPM, AND ADJUST BELT TENSION.
      - VERIFY ALL FUNCTIONS OF THE FIRE FIGHTERS' SMOKE CONTROL STATION TO OPERATE FANS, INDICATE STATUS, AND INDICATE FAULTS.
      - ADJUST THE FAN VFD'S AND BAROMETRIC DAMPERS TO PROVIDE A MINIMUM OF 0.05" W.G. POSITIVE PRESSURE IN THE STAIRWELL WITH A MAXIMUM OF THREE (3) STAIRWAY DOORS OPEN.
      - ADJUST THE FAN VFD'S AND BAROMETRIC DAMPERS TO PROVIDE A MAXIMUM THIRTY (30) POUNDS DOOR OPENING FORCE AS MEASURED AT THE DOOR HANDLE FOR STAIRWAY DOORS WITH ALL DOORS CLOSED.

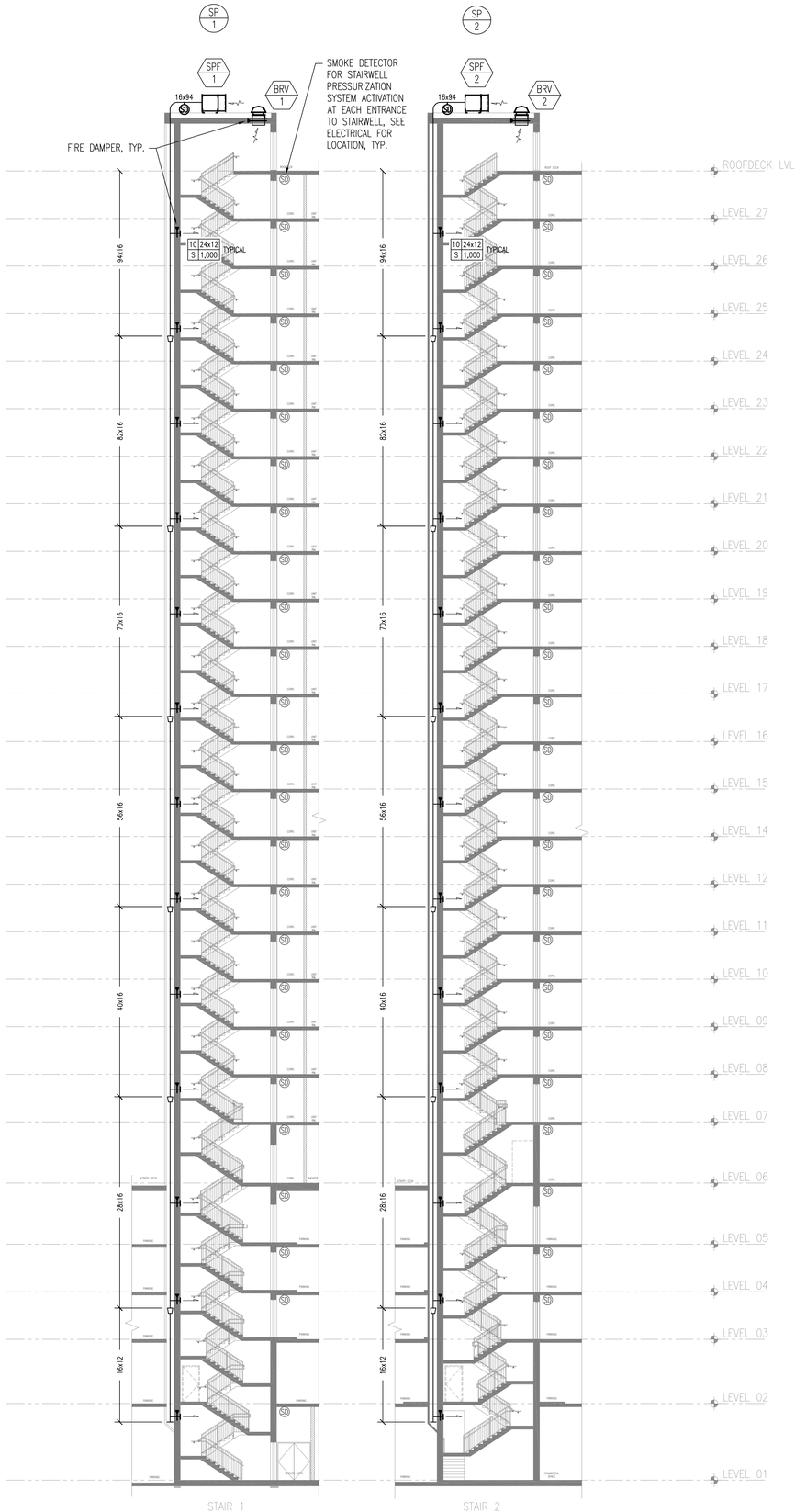

1 STAIRWELL PRESSURIZATION RISER DIAGRAMS
SCALE: NOT TO SCALE

CROSSLAND ENGINEERING
Big Firm Results. Small Firm Service.

ENGINEER:
THIS WORK WAS PREPARED BY ME OR UNDER MY SUPERVISION AND CONSTRUCTION OF THIS PROJECT WILL BE UNDER MY OBSERVATION.

ANDREW S. CROSSLAND
LICENSED PROFESSIONAL ENGINEER
No. 16028-M
HAWAII U.S.A.

EXPIRES: 4/30/2020

DEVELOPER:
CALIFORNIA INVESTMENT REGIONAL CENTER, LLC

PROJECT OWNER:
HAWAII CITY PLAZA, LP

Hawaii City Plaza
Honolulu, Hawaii
710 Sheridan Street
TMK 2-3-014: Parcels 002, 004, & 011

PERMIT SET

DATE 2019 MARCH 19

PROJECT # 15028-02

SHEET TITLE
STAIRWELL PRESSURIZATION RISER DIAGRAMS

SHEET NO.
M-502

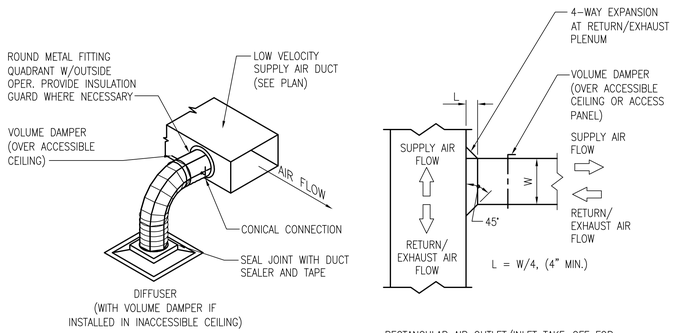

NOTES:

1. PROVIDE STAND-OFF FOR DAMPER HANDLE IF DUCTWORK IS INSULATED.
2. PROVIDE A REMOTE REGULATOR OR ACCESS DOOR IF DAMPER IS ABOVE AN INACCESSIBLE CEILING.
3. ALL BRANCH FINAL DUCT RUNS TO DIFFUSERS SHALL HAVE THE DAMPER UNLESS THE LENGTH OF DUCTWORK MAKE INSTALLATION NOT FEASIBLE.

5 DUCT LOW PRESSURE AIR OUTLET/TAKE OFF DETAIL
NOT TO SCALE

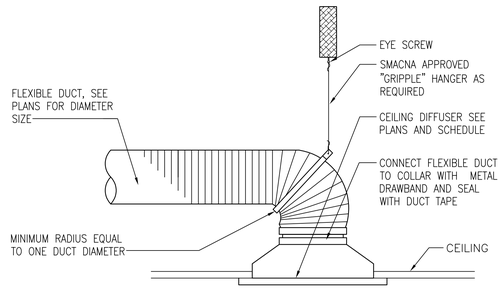

NOTES:

1. MAXIMUM ALLOWABLE LENGTH OF FLEX DUCT IS TO BE 5 FEET (TYPICAL).
2. COORDINATE BORDER TYPE WITH CEILING CONSTRUCTION.
3. WHEN LAY-IN AIR INLET OR OUTLET IS INSTALLED IN HARD CEILING PROVIDE A FRAME TO ALLOW DIFFUSER TO BE LIFTED OUT OF CEILING.

6 CEILING DIFFUSER INSTALLATION DETAIL
NOT TO SCALE

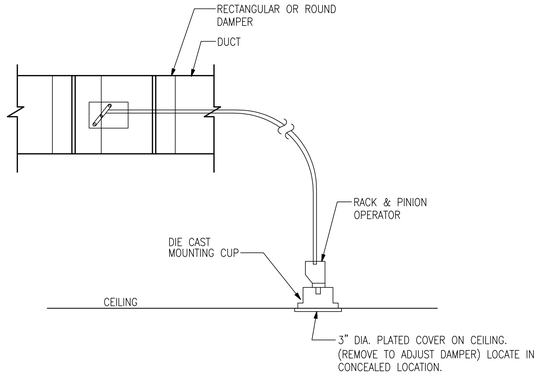

NOTES:

1. PROVIDE FOR ALL MANAUL DAMPERS THAT ARE ABOVE INACCESSIBLE CEILINGS AND ARE WITHOUT AN ACCESS PANEL.
2. COORDINATE LOCATION OF PLATE COVER WITH ARCHITECT AND PROVIDE LOCATION ON SHOP DRAWINGS.
3. SEE SPECIFICATIONS FOR ADDITIONAL DETAILS.

7 CONCEALED DAMPER YOUNG REGULATOR DETAIL
NOT TO SCALE

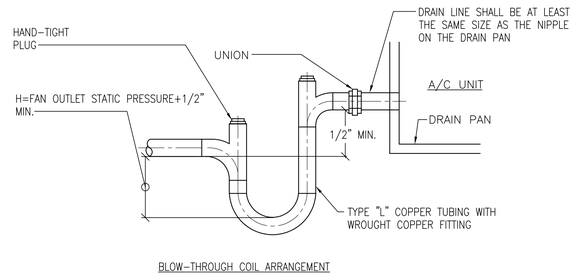

NOTES:

1. CONDENSATE DRAIN PIPE SHALL BE INSULATED; SEE SPECIFICATIONS.
2. CONFIRM BLOW-THROUGH OR DRAW-THROUGH COIL ARRANGEMENT AND FAN INLET PRESSURE WITH EACH PIECE OF INSTALLED INSTALLED EQUIPMENT HAVING A CONDENSATE DRAIN CONNECTION.

3 CONDENSATE DRAIN TRAP INSTALLATION DETAIL
NOT TO SCALE

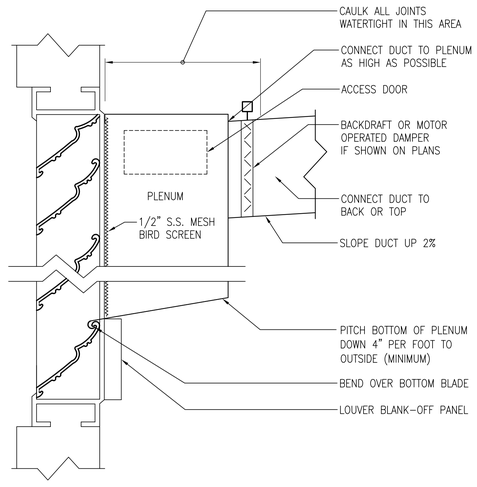

NOTES:

1. SEE PLANS FOR LOUVER AND DUCT SIZES.

4 DUCT CONNECTION TO WATERPROOF LOUVER DETAIL
NOT TO SCALE

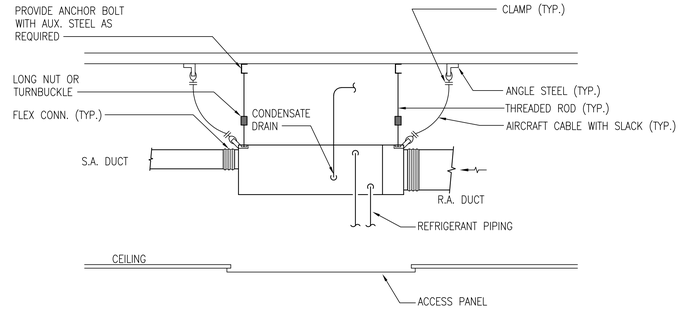

NOTES:

1. CONFIRM ANCHOR BOLT REQUIREMENTS WITH MANUFACTURER.
2. DETAIL IS DIAGRAMMATIC; INSTALL FAN COIL UNIT AND PIPING AS HIGH AS POSSIBLE.
3. FAN COIL UNIT INCLUDES INTEGRAL CONDENSATE DRAIN PUMP; ROUTE CONDENSATE DRAIN PIPE AS HIGH AS POSSIBLE.
4. IF FILTER SECTION DOESN'T COME WITH THE UNIT A DUCT MOUNTED FILTER BOX SHALL BE PROVIDED.
5. IF FCU IS LOCATED ABOVE A HARD CEILING, PROVIDE ACCESS PANELS TO ENSURE ACCESS TO VALVES, CONDENSATE DRAIN, FILTER, CONTROLLER, ETC.
6. CONTRACTOR SHALL INSTALL THE FAN COIL UNIT WITH PROPER CLEARANCES FOR SERVICE AND MAINTENANCE PER MANUFACTURER REQUIREMENTS.

1 CONCEALED FAN COIL UNIT DETAIL
NOT TO SCALE

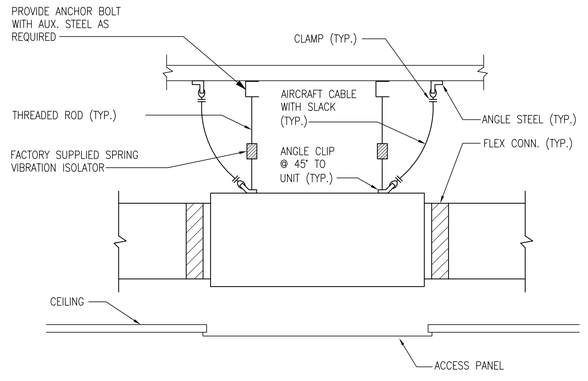

NOTES:

1. CONFIRM ANCHOR BOLT REQUIREMENTS WITH MANUFACTURER.
2. IF EXHAUST FAN IS LOCATED ABOVE A HARD CEILING, PROVIDE ACCESS PANELS TO ENSURE ACCESS TO CONTROLLER, ETC.
3. CONTRACTOR SHALL INSTALL THE EXHAUST FAN WITH PROPER CLEARANCES FOR SERVICE AND MAINTENANCE PER MANUFACTURER REQUIREMENTS.

2 INLINE EXHAUST FAN DETAIL
NOT TO SCALE

CROSSLAND ENGINEERING
Big Firm Results. Small Firm Service.
67[illegible] Lewers Street, Honolulu, HI 96815
(808) 462-8640 | info@crosslandeng.com | www.crosslandeng.com

ENGINEER:
THIS WORK WAS PREPARED BY ME OR UNDER MY SUPERVISION AND CONSTRUCTION OF THIS PROJECT WILL BE UNDER MY OBSERVATION.
ANDREW S. CROSSLAND
LICENSED PROFESSIONAL ENGINEER
No. 16028-M
HAWAII U.S.A.
EXPIRES: 4/30/2020

DEVELOPER:
CALIFORNIA INVESTMENT REGIONAL CENTER, LLC

PROJECT OWNER:
HAWAII CITY PLAZA, LP

Hawaii City Plaza
Honolulu, Hawaii
710 Sheridan Street
TMK 2-3-014: Parcels 002, 004, & 011

PERMIT SET

DATE 2019 MARCH 19

PROJECT # 15028-02

SHEET TITLE
M-601 - F-601

SHEET NO.

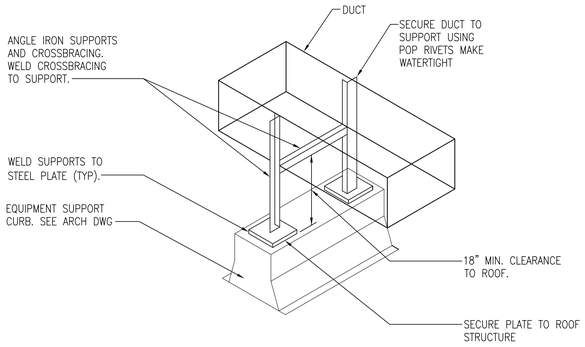

NOTES:

1. SUPPORT DUCTWORK AT THE MIDPOINT BETWEEN DUCT JOINTS.
2. COAT ALL WELDED JOINTS W/ ASPHALT EMULSION.
3. PROVIDE 2 COATS OF CORROSION RESISTANT PAINT ON DUCT SUPPORTS. REFER TO ARCHITECTURAL SPECS.
4. COORDINATE FLASHING AND WATERPROOFING REQUIREMENTS WITH ARCHITECTURAL DRAWINGS AND ROOFING CONTRACTOR.

5 DUCT SUPPORT ON ROOF DETAIL
NOT TO SCALE

NOTES:

1. COORDINATE CONCRETE ROOF CURBS WITH ARCHITECTURAL AND STRUCTURAL DRAWINGS.
2. COORDINATE FLASHING AND WATERPROOFING REQUIREMENTS WITH ARCHITECTURAL DRAWINGS AND ROOFING CONTRACTOR.

6 DUCT THRU ROOF DETAIL
NOT TO SCALE

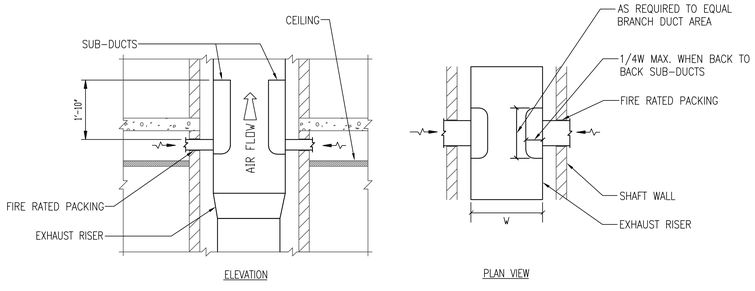

NOTES:

1. SEE PLANS FOR EXHAUST RISER DUCT AND BRANCH DUCT SIZES.

7 EXHAUST DUCT RISER SUBDUCT DETAIL
NOT TO SCALE

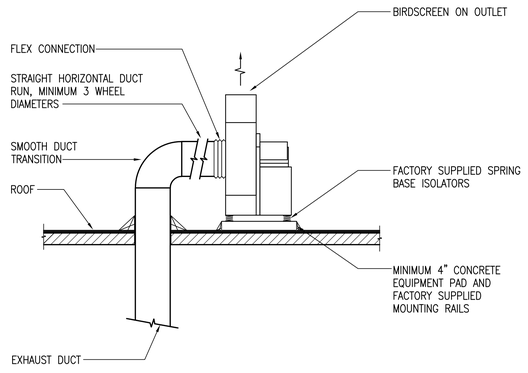

NOTES:

1. COORDINATE FLASHING AND WATERPROOFING REQUIREMENTS WITH ARCHITECTURAL DRAWINGS AND ROOFING CONTRACTOR.
2. FAN SHALL BE RATED FOR 105 MPH WIND VELOCITY.
3. CONFIRM ANCHOR BOLT REQUIREMENTS WITH MANUFACTURER.
4. CONCRETE PAD SHALL BE 3000 PSI MINIMUM AND REINFORCED WITH REBAR TO ACI STANDARDS FOR MINIMUM AREA AND CONCRETE COVERAGE. A MINIMUM OF FOUR ANCHOR BOLTS ARE REQUIRED TO ANCHOR THE CONCRETE PAD TO THE STRUCTURE.
5. CONTRACTOR SHALL INSTALL THE EXHAUST FAN WITH PROPER CLEARANCES FOR SERVICE AND MAINTENANCE PER MANUFACTURER REQUIREMENTS.

3 ROOF UTILITY SET EXHAUST FAN DETAIL
NOT TO SCALE

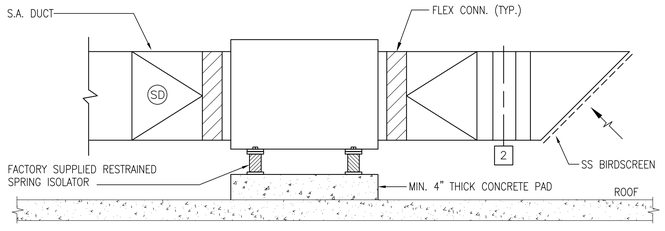

NOTES:

1. COORDINATE FLASHING AND WATERPROOFING REQUIREMENTS WITH ARCHITECTURAL DRAWINGS AND ROOFING CONTRACTOR.
2. CONFIRM ANCHOR BOLT AND VIBRATION ISOLATION PAD REQUIREMENTS WITH MANUFACTURER.
3. CONCRETE PAD SHALL BE 3000 PSI MINIMUM AND REINFORCED WITH REBAR TO ACI STANDARDS FOR MINIMUM AREA AND CONCRETE COVERAGE. A MINIMUM OF FOUR ANCHOR BOLTS ARE REQUIRED TO ANCHOR THE CONCRETE PAD TO THE STRUCTURE.
4. TWO-POSITION DAMPER SHALL BE INTERLOCKED WITH FAN.
5. REFER TO SEPARATE DETAIL FOR DUCT SUPPORT REQUIREMENTS.
6. PROVIDE STAINLESS STEEL BIRDSCREEN AT INLET.
7. PROVIDE CORROSION PROTECTION ON UNIT.
8. PROVIDE 2 COATS OF CORROSION RESISTANT PAINT ON DUCTWORK.
9. CONTRACTOR SHALL INSTALL THE SUPPLY FAN WITH PROPER CLEARANCES FOR SERVICE AND MAINTENANCE PER MANUFACTURER REQUIREMENTS.

4 STAIRWELL PRESSURIZATION FAN DETAIL
NOT TO SCALE

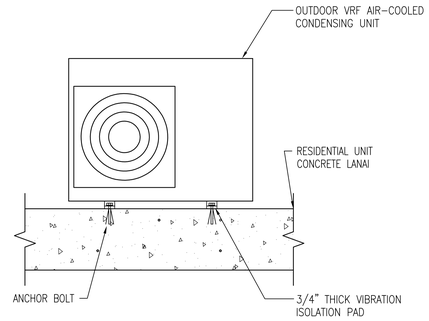

NOTES:

1. CONFIRM ANCHOR BOLT AND VIBRATION ISOLATION PAD REQUIREMENTS WITH MANUFACTURER.
2. CONTRACTOR SHALL INSTALL THE ACCU WITH PROPER CLEARANCES FOR SERVICE, MAINTENANCE, AND AIRFLOW PER MANUFACTURER REQUIREMENTS.

1 VRF MINI SPLIT ACCU MOUNTING DETAIL
NOT TO SCALE

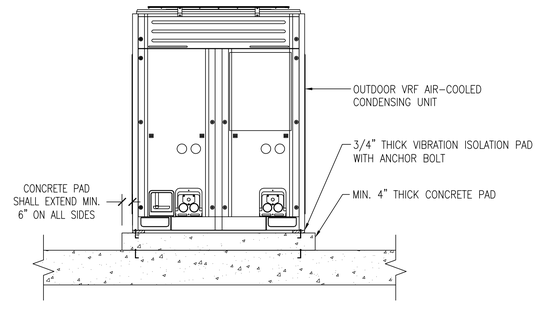

NOTES:

1. CONFIRM ANCHOR BOLT AND VIBRATION ISOLATION PAD REQUIREMENTS WITH MANUFACTURER.
2. CONCRETE PAD SHALL BE 3000 PSI MINIMUM AND REINFORCED WITH REBAR TO ACI STANDARDS FOR MINIMUM AREA AND CONCRETE COVERAGE. A MINIMUM OF FOUR ANCHOR BOLTS ARE REQUIRED TO ANCHOR THE CONCRETE PAD TO THE STRUCTURE.
3. CONTRACTOR SHALL INSTALL THE ACCU WITH PROPER CLEARANCES FOR SERVICE, MAINTENANCE, AND AIRFLOW PER MANUFACTURER REQUIREMENTS.

2 VRF MULTI SPLIT ACCU MOUNTING DETAIL
NOT TO SCALE

CROSSLAND ENGINEERING
Big Firm Results. Small Firm Service.
1571 Liona Street, Honolulu, HI 96822
(808) 462-8646 | info@crosslandeng.com | www.crosslandeng.com

ENGINEER:
THIS WORK WAS PREPARED BY ME OR UNDER MY SUPERVISION AND CONSTRUCTION OF THIS PROJECT WILL BE UNDER MY OBSERVATION.

ANDREW S. CROSSLAND
LICENSED PROFESSIONAL ENGINEER
No. 16028-M
HAWAII U.S.A.

EXPIRES: 4/30/2020

DEVELOPER:
CALIFORNIA INVESTMENT REGIONAL CENTER, LLC

PROJECT OWNER:
HAWAII CITY PLAZA, LP

Hawaii City Plaza
Honolulu, Hawaii
710 Sheridan Street
TMK 2-3-014: Parcels 002, 004, & 011

PERMIT SET

DATE 2019 MARCH 19

PROJECT # 15028-02

SHEET TITLE
HVAC DETAILS

SHEET NO.
M-602

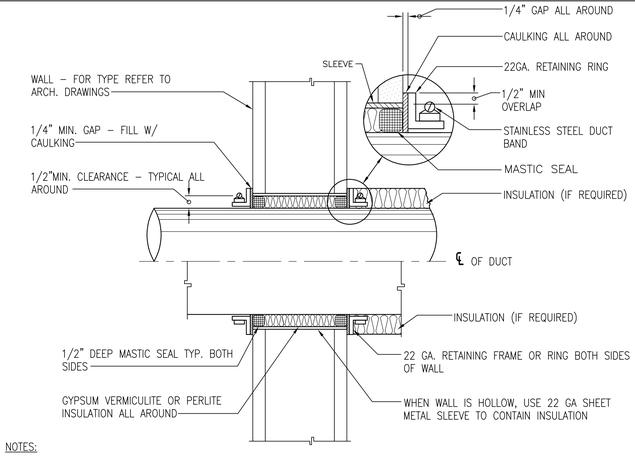

NOTES:

1. SEE SPECIFICATIONS FOR ADDITIONAL REQUIREMENTS.
2. FOR DUCTS THAT ARE EXTERNALLY INSULATED, EXTEND INSULATION UPWARDS TO ENSURE METAL FRAMING RING IS FULLY INSULATED.

4 DUCT THRU NON-RATED WALL DETAIL
NOT TO SCALE

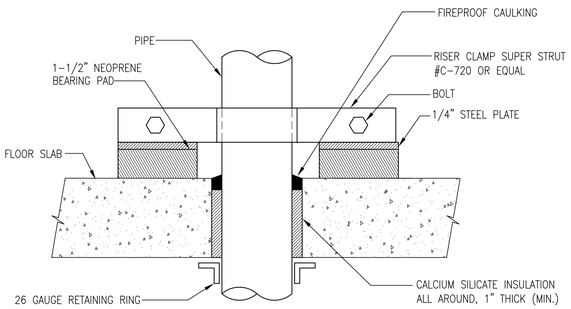

NOTES:

1. SEE SPECIFICATIONS FOR SLEEVE, SLEEVE-SEAL, AND RISER CLAMP REQUIREMENTS.
2. ALL PIPE PENETRATIONS THROUGH FIRE-RATED ASSEMBLIES SHALL BE PROTECTED BY AN APPROVED THROUGH-PENETRATION FIRESTOP SYSTEM IN ACCORDANCE WITH 2006 IBC AND WITH RATINGS AS DETERMINED BY ASTM E 814 OR UL 1479.
3. WHERE CONFLICT OCCURS, THE ASSEMBLY REQUIREMENTS OF ASTM E 814, UL 1479, AND/OR THE APPROPRIATE UL SYSTEM SHALL SUPERCEDE THIS DETAIL.

5 PIPE RISER CLAMP DETAIL
NOT TO SCALE

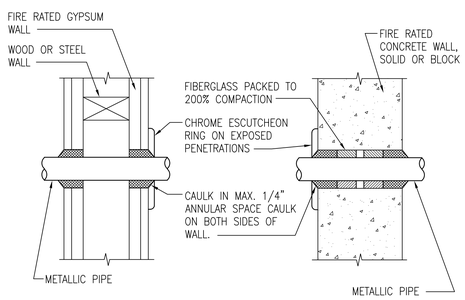

NOTES:

1. SEE SPECIFICATIONS FOR SLEEVE, SLEEVE-SEAL, AND ESCUTCHEON REQUIREMENTS.
2. ALL PIPE PENETRATIONS THROUGH FIRE-RATED WALL ASSEMBLIES SHALL BE PROTECTED BY AN APPROVED THROUGH-PENETRATION FIRESTOP SYSTEM IN ACCORDANCE WITH 2006 IBC AND WITH RATINGS AS DETERMINED BY ASTM E 814 OR UL 1479.
3. WHERE CONFLICT OCCURS, THE ASSEMBLY REQUIREMENTS OF ASTM E 814, UL 1479, AND/OR THE APPROPRIATE UL SYSTEM SHALL SUPERCEDE THIS DETAIL.

6 PIPE THRU FIRE-RATED WALL DETAIL
NOT TO SCALE

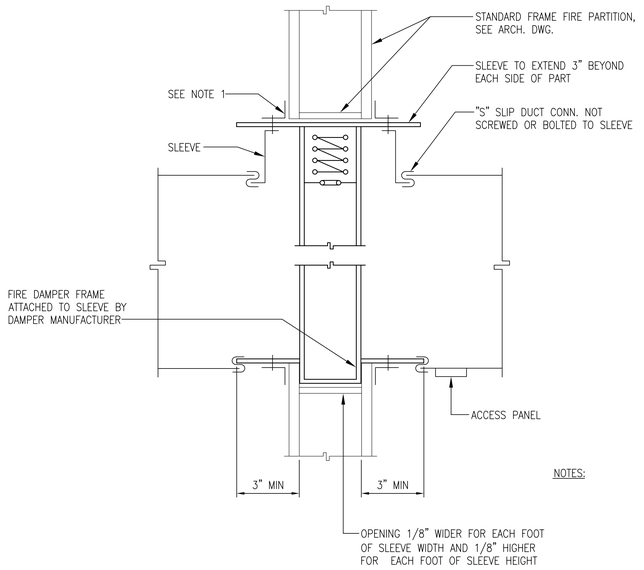

NOTES:

1. ANGLES ALL AROUND SLEEVE ON BOTH SIDES OF PARTITION. WELDED OR BOLTED TO SLEEVE WITH 1" FILLETS AT 5" O.C. MAXIMUM. ANGLES ARE NOT ATTACHED TO WALL TO PROVIDE FOR EXPANSION. IN NO CASE SHALL ANGLE OVERLAP WALL FRAMING LESS THAN 1". SEE MANUFACTURER'S REQUIREMENTS FOR SIZE AND GAUGE OF ANGLES. REFER TO SFMO REQUIREMENTS.
2. ENSURE ACCESS PANEL IS OF SUFFICIENT SIZE TO ACCESS FUSIBLE LINK AND TEST DAMPER. PROVIDE MINIMUM SQUARE DIMENSION OF 2" LESS THAN DUCT WIDTH TO A MAX OF 24"x24".
3. DAMPER SHALL NOT IMPAIR FIRE RESISTIVE CONSTRUCTION.
4. ACCESS SHALL NOT REQUIRE THE USE OF TOOLS, KEYS OR SPECIAL KNOWLEDGE.
5. FIRE DAMPER SHALL BE CURTAIN TYPE WITH BLADES OUT OF THE AIRSTREAM.
6. DAMPER SHALL BE INSTALLED PER THE MANUFACTURER'S RECOMMENDATIONS.
7. ALL DUCT PENETRATIONS THROUGH FIRE-RATED ASSEMBLIES SHALL BE PROTECTED BY AN APPROVED THROUGH-PENETRATION FIRESTOP SYSTEM IN ACCORDANCE WITH 2006 IBC AND WITH RATINGS AS DETERMINED BY ASTM E 814 OR UL 1479.
8. WHERE CONFLICT OCCURS, THE ASSEMBLY REQUIREMENTS OF ASTM E 814 OR UL 1479 SHALL SUPERCEDE THIS DETAIL.

2 FIRE DAMPER DETAIL
NOT TO SCALE

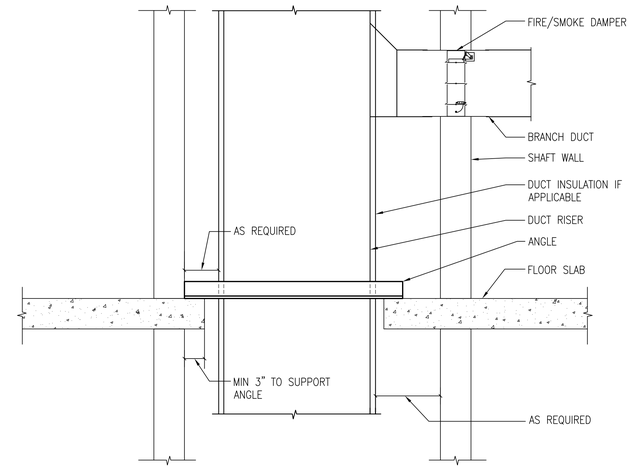

NOTES:

1. SUPPORT DUCT RISER PER SMACNA GUIDELINES.

1 OUTSIDE AIR DUCT RISER SUPPORT DETAIL
NOT TO SCALE

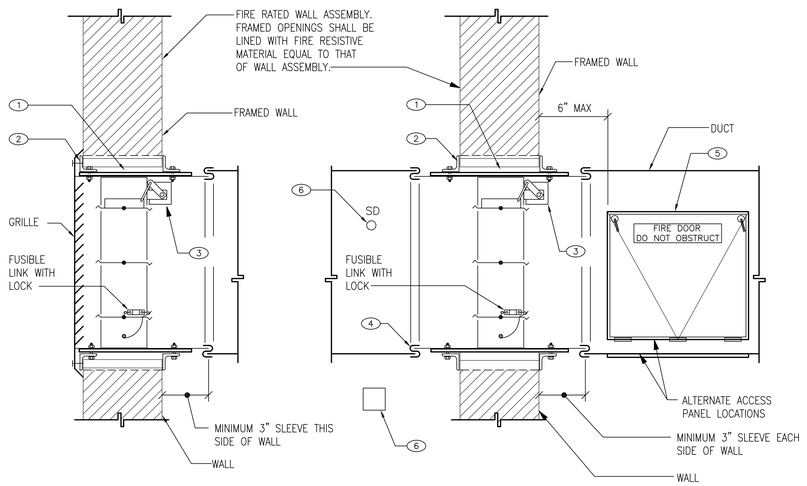

KEY NOTES:

1. ALLOWABLE CLEARANCE ON TOP OF FIRE DAMPER TO TOP OF OPENING SHALL BE 1/8" PER FOOT OF FIRE DAMPER HEIGHT. FIRE DAMPER SHALL REST ON BOTTOM OF WALL OPENING AND SHALL BE CENTERED SIDE TO SIDE IN OPENING WITH CLEARANCE OF 1/16" PER FOOT OF FIRE DAMPER ON EACH SIDE.
2. SLEEVE RETAINING ANGLES FASTENED TO FIRE DAMPER SLEEVE. ANGLES SHALL BE INSTALLED ON ALL FOUR SIDES OF DAMPER AND ON EACH SIDE OF THE WALL. ANGLE GAGE AND FASTENING METHOD AS PERMITTED AS A CONDITION OF DAMPER LISTING. REFER TO MANUFACTURER'S WRITTEN INSTALLATION INSTRUCTIONS. MINIMUM 1" ANGLE OVERLAP ON ALL FOUR SIDES.
3. ACTUATOR MOTOR SHALL BE INTERLOCKED WITH SMOKE DETECTOR.
4. DUCT CONNECTION AS PERMITTED AS A CONDITION OF DAMPER LISTING ("S" SLIP CONNECTION SHOWN).
5. ACCESS TO FIRE DAMPER BLADES AND ACTUATOR MOTOR SHALL BE THROUGH DUCT ACCESS PANEL. PANEL SHALL BE HINGED WITH A TIGHT FITTING SEAL. ACCESS SIZE SHALL BE A MINIMUM OF 18" LONG IN DIRECTION OF AIRFLOW BY HEIGHT OR WIDTH OF DUCT (PERPENDICULAR TO AIRFLOW) WITH A 12" MINIMUM. WHERE 12" CANNOT BE ACHIEVED, CONTRACTOR SHALL INSTALL EASILY REMOVABLE AND REPLACEABLE TIGHTLY GASKETED DUCT SECTION(S). ACCESS PANEL SHALL BE LABELED WITH THE WORDS, "FIRE DOOR – DO NOT OBSTRUCT" IN LETTERS NO LESS THAN 1" IN HEIGHT. EXTERNAL INSULATION SHALL NOT CONCEAL ACCESS UNLESS A LABEL IS ATTACHED TO THE INSULATION WHICH INDICATES THE EXACT LOCATION OF THE OPENING. ACCESS SHALL NOT REQUIRE THE USE OF TOOLS, KEYS OR SPECIAL KNOWLEDGE. DAMPER ACCESS SHALL NOT IMPAIR FIRE RESISTIVE CONSTRUCTION.
6. DEDICATED DUCT SMOKE DETECTOR WITH REMOTE TEST RESET SWITCH.
7. LOCATE 1/2" HIGH WHITE PLASTIC LAMINATE SIGNS WITH 3/8" HIGH BLACK LETTERING WITH THE INITIALS "FSD" ON THE CEILING ACCESS DOOR OR T-BAR CEILING GRID IN THE AREA OF THE DAMPER ACCESS PANEL. ATTACH TO CEILING WITH EPOXY ADHESIVE.
8. FIRE DAMPER DETAIL FOR REFERENCE ONLY. FIRE DAMPERS SHALL BE STATE FIRE MARSHAL APPROVED AND COMPLETE INSTALLATION SHALL BE PER MANUFACTURER'S PRINTED INSTRUCTIONS WHICH SHALL BE MADE AVAILABLE TO INSPECTION AUTHORITIES.

NOTES:

1. ALL DUCT PENETRATIONS THROUGH FIRE-RATED ASSEMBLIES SHALL BE PROTECTED BY AN APPROVED THROUGH-PENETRATION FIRESTOP SYSTEM IN ACCORDANCE WITH 2006 IBC AND WITH RATINGS AS DETERMINED BY ASTM E 814 OR UL 1479.
2. WHERE CONFLICT OCCURS, THE ASSEMBLY REQUIREMENTS OF ASTM E 814, UL 1479, AND/OR THE APPROPRIATE UL SYSTEM SHALL SUPERCEDE THIS DETAIL.

3 FIRE/SMOKE DAMPER DETAIL
NOT TO SCALE

CROSSLAND ENGINEERING
Big Firm Results. Small Firm Service.
821 Kaheka Street, Honolulu, HI 96822
(808) 462-8686 · info@crosslandengineering.com · www.crosslandengineering.com

ENGINEER:
THIS WORK WAS PREPARED BY ME OR UNDER MY SUPERVISION AND CONSTRUCTION OF THIS PROJECT WILL BE UNDER MY OBSERVATION.
ANDREW S. CROSSLAND LICENSED PROFESSIONAL ENGINEER No. 16028-M HAWAII U.S.A.
EXPIRES: 4/30/2020

DEVELOPER:
CALIFORNIA INVESTMENT REGIONAL CENTER, LLC

PROJECT OWNER:
HAWAII CITY PLAZA, LP

Hawaii City Plaza
Honolulu, Hawaii
710 Sheridan Street
TMK 2-3-014: Parcels 002, 004, & 011

PERMIT SET

DATE 2019 MARCH 19

PROJECT # 15028-02

SHEET TITLE
HVAC DETAILS

SHEET NO.
M-603

PLUMBING LEGEND

SYMBOL	ABBREV.	DESCRIPTION
PLUMBING PIPING		
	CW	COLD WATER PIPE
	HW	HOT WATER PIPE
	HWR	HOT WATER RETURN PIPE
	W	SANITARY WASTE PIPE
	GW	GREASE WASTE PIPE
	V	SANITARY VENT PIPE
	G	NATURAL GAS PIPE
	SD	STORM DRAIN
	OFD	OVERFLOW DRAIN
PLUMBING SYMBOLS		
		CIRCULATION PUMP
		FLOOR CLEANOUT OR GRADE CLEANOUT
		WALL CLEANOUT
		PIPE CLEANOUT
		FLOOR DRAIN
		FLOOR SINK
		ROOF DRAIN
		HOSE BIBB
GENERAL PIPING SYMBOLS AND VALVES		
		PIPE BRANCH TAKE-OFF FROM BOTTOM
		PIPE BRANCH TAKE-OFF FROM TOP
		PIPE DROP
		PIPE RISE
		DIRECTION OF FLOW
	SOV	SHUTOFF VALVE (SEE SPECS FOR TYPE)
		BALANCING VALVE
		2-WAY CONTROL VALVE
		MOTOR OPERATED VALVE
	PRV	PRESSURE REDUCING VALVE
		CHECK VALVE
		WYE STRAINER WITH DRAIN VALVE
		PIPE UNION
		PIPE FLANGE
		FLEXIBLE PIPE CONNECTION
	DCBP	DOUBLE CHECK BACKFLOW PREVENTER
		PRESSURE RELIEF VALVE
	T&P	TEMPERATURE AND PRESSURE RELIEF VALVE
	PT	PRESSURE AND TEMPERATURE TEST PORT
		TEMPERATURE GAUGE AND PRESSURE GAUGE
TAGS		
A / B		EQUIPMENT TAG A – EQUIPMENT TYPE B – NUMBER
A B		PLUMBING FIXTURE TAG A – FIXTURE TYPE B – NUMBER
A		KEYNOTE TAG KEYNOTE NUMBER "A"
A / B		DETAIL TAG DETAIL "A" ON SHEET "B"

CITY AND COUNTY OF HONOLULU
REVISED ORDINANCE CHAPTER 32,
HONOLULU COUNTY CODE 1990, AS AMENDED

To the best of my knowledge, this projects design substantially conforms to the Building Energy Conservation Code for:

_____ Building Component Systems
_____ Electrical Component Systems
__X__ Mechanical Component Systems

Signature: ______ Date: 3/19/2019
Name: ANDREW S. CROSSLAND
Title: OWNER, PRINCIPAL MECHANICAL ENGINEER
License No: 16028–M

GENERAL NOTES

CODES, STANDARDS, AND AUTHORITIES:

A. ALL WORK SHALL COMPLY WITH ALL APPLICABLE STATE, COUNTY, AND MUNICIPAL CODES, AND ALL LOCAL CODES AND ORDINANCES. WHERE PROVISIONS OF PERTINENT CODES AND STANDARDS CONFLICT WITH THE CONTRACT DOCUMENTS, THE MORE STRINGENT PROVISIONS SHALL GOVERN.
B. BEFORE COMMENCING WORK, THE CONTRACTOR SHALL FILE ALL REQUIRED CERTIFICATES OF INSURANCE WITH THE BUILDING DEPARTMENT, OBTAIN ALL REQUIRED PERMITS, AND PAY ALL FEES REQUIRED BY GOVERNING LOCAL AGENCIES AND AUTHORITIES HAVING JURISDICTION.
C. THE GENERAL CONTRACTOR SHALL BE RESPONSIBLE FOR COORDINATING ALL APPLICABLE CODE INSPECTIONS AS REQUIRED BY THE AUTHORITIES HAVING JURISDICTION TO OBTAIN THE BUILDING PERMIT.
D. ALL CONTRACTORS SHALL BE QUALIFIED AND LICENSED FOR WORK THEY PERFORM.

QUALITY ASSURANCE AND GUARANTEE:

A. ALL INSTALLED PRODUCTS, MATERIALS AND EQUIPMENT SHALL BE NEW AND IN PERFECT CONDITION. WORKMANSHIP SHALL BE THE BEST STANDARD PRACTICE OF TRADE.
B. THE CONTRACTOR SHALL FURNISH WRITTEN, CERTIFIED GUARANTEE, IN ACCEPTABLE FORM, TO THE OWNER AGAINST DEFECTIVE WORKMANSHIP, PRODUCTS, MATERIALS, AND EQUIPMENT. FURTHER GUARANTEE TO ADJUST ENTIRE SYSTEM, OR ANY PART THEREOF, AS REQUIRED FOR PERFECT OPERATION FOR A PERIOD OF ONE YEAR AFTER BENEFICIAL USE OR ACCEPTANCE OF OWNER, WHICHEVER IS FIRST. REPAIR, REPLACE, AND MAKE SATISFACTORILY OPERATIVE ALL DEFECTIVE ITEMS AND WORK HOLDING OWNER FREE FROM COST AND LIABILITY IN CONNECTION THEREWITH, FOR THE TERM OF THE GUARANTEE.

CONTRACTOR BID:

A. THE CONTRACTOR'S BID SHALL BE BASED ON ALL WORK SHOWN ON THE PLANS AND AS SPECIFIED IN THE CONTRACT DOCUMENTS. IT IS THE CONTRACTOR'S RESPONSIBILITY TO VISIT THE SITE AND BE FULLY FAMILIAR WITH FIELD CONDITIONS PRIOR TO SUBMITTING BID.
B. CONFLICTS AND/OR PROBLEMS SHALL BE REPORTED PRIOR TO BIDDING FOR RESOLUTION. FAILURE TO REPORT THESE CONFLICTS PLACES THE RESPONSIBILITY ON THE CONTRACTOR TO COMPLETE THE WORK AT THE REASONABLE DIRECTION OF OWNER AND CONSULTANTS, AT NO ADDITIONAL COST TO THE OWNER.

CONGRUENCE:

A. REFER TO DRAWINGS AND SPECIFICATIONS OF ALL TRADES FOR ADDITIONAL GENERAL NOTES, ABBREVIATIONS, AND SYMBOLS LEGENDS. ALL NOTES ARE TO BE REVIEWED AND APPLIED TO RELATED BUILDING COMPONENTS.
B. NOTES APPEAR ON VARIOUS SHEETS FOR DIFFERENT SYSTEMS, PRODUCTS, MATERIALS, AND EQUIPMENT. ALL SHEETS ARE TO BE REVIEWED AND NOTES ON ANY SHEET ARE TO BE APPLIED TO RELATED SYSTEMS, PRODUCTS, MATERIALS, AND EQUIPMENT DEPICTED ON OTHER DRAWINGS.

COORDINATION:

A. THE CONTRACTOR SHALL COORDINATE ALL WORK PROCEDURES AND NECESSARY SPECIAL INSPECTIONS WITH REQUIREMENTS OF LOCAL AUTHORITIES, THE OWNER, AND BUILDING MANAGEMENT.
B. THESE DRAWINGS ARE DIAGRAMMATIC AND ALL CONTRACTORS MUST CAREFULLY COORDINATE THEIR WORK WITH EACH OTHER, THE GENERAL CONTRACTOR, AND OTHER TRADES. PRIORITY SHALL BE GIVEN IN THE FOLLOWING ORDER: GRAVITY SLOPED PLUMBING PIPING; EQUIPMENT, DUCTWORK, AND CONDUIT; FORCED AND PRESSURE PIPING SUCH AS WATER AND FIRE SPRINKLER PIPING.
C. CAREFULLY CHECK SERVICE CLEARANCE REQUIREMENTS WITH OTHER TRADES TO ENSURE THAT ALL PRODUCTS, MATERIALS, AND EQUIPMENT CAN BE INSTALLED IN THE SPACES ALLOTTED THERETO.
D. TRANSMIT TO TRADES DOING WORK OF OTHER SECTIONS ALL INFORMATION REQUIRED FOR THE WORK TO BE PROVIDED UNDER THEIR RESPECTIVE SECTIONS IN AMPLE TIME FOR INSTALLATION.
E. WHEREVER ANY CONTRACTOR'S WORK INTERCONNECTS WITH THE WORK OF OTHER CONTRACTORS, THOSE CONTRACTORS SHALL COORDINATE THEIR WORK TO ENSURE THAT ALL CONTRACTORS HAVE THE INFORMATION NECESSARY TO PROPERLY INSTALL ALL CONNECTIONS.
F. WHILE THE DRAWINGS SHALL BE ADHERED TO AS CLOSELY AS POSSIBLE, THE CONTRACTOR MAY VARY THE RUNS OF PIPING, CONDUIT, AND DUCTWORK, AND MAY MAKE OFFSETS WHERE NECESSARY TO ACCOMMODATE CONDITIONS ARISING AT THE SITE. REASONABLE MODIFICATIONS TO SUIT JOB CONDITIONS SHALL NOT CONSTITUTE BASIS FOR REQUESTING OF ADDITIONAL FUNDS FROM THE OWNER.

SUBMITTALS AND SUBSTITUTIONS:

A. THE CONTRACTOR SHALL SUBMIT ELECTRONIC COPIES OF PRODUCT, MATERIAL, AND EQUIPMENT DATA, AND DIMENSIONED SHOP DRAWINGS FOR REVIEW AND APPROVAL BY THE OWNER, BUILDING MANAGEMENT, AND CROSSLAND ENGINEERING PRIOR TO COMMENCING ANY WORK. ALL WORK DONE PRIOR TO APPROVAL SHALL BE SUBJECT TO REPAIR OR REPLACEMENT AT NO COST TO OWNER. SHOP DRAWINGS SHALL BE COORDINATED WITH OTHER TRADES.
B. IF THE CONTRACTOR PROPOSES TO SUBSTITUTE FOR ANY PRODUCTS, MATERIALS, OR EQUIPMENT SPECIFIED IN THE CONTRACT DOCUMENTS, HE SHALL SUBMIT HIS REQUEST FOR CONSIDERATION OF THE OWNER AND CONSULTANTS PRIOR TO BID IN WRITING. SUCH APPROVAL SHALL NOT RELIEVE THE CONTRACTOR FROM COMPLYING WITH THE REQUIREMENTS OF THE DRAWINGS AND SPECIFICATIONS, AND THE CONTRACTOR SHALL BE RESPONSIBLE AT HIS OWN EXPENSE FOR ANY CHANGES RESULTING FROM HIS PROPOSED SUBSTITUTIONS WHICH AFFECT OTHER PARTS OF HIS OWN WORK OR THE WORK OF OTHER CONTRACTORS.

EXECUTION OF WORK:

A. THE CONTRACTOR SHALL BE RESPONSIBLE FOR THE SAFETY AND GOOD CONDITION OF ALL PRODUCTS, MATERIALS, AND EQUIPMENT OF THE ENTIRE INSTALLATION UNTIL FINAL ACCEPTANCE BY THE OWNER. HE SHALL ERECT AND MAINTAIN SUITABLE BARRIERS, PROTECTIVE DEVICES, LIGHTS OR WARNING SIGNS, WHERE REQUIRED, FOR THE PROTECTION OF THE PUBLIC AND EMPLOYEES IN THE BUILDING AND SHALL BE FULLY RESPONSIBLE FOR ANY LOSS OR INJURY TO PERSONS OR PROPERTIES RESULTING FROM HIS NEGLECT OF THESE PRECAUTIONS, HIS OWN CARELESSNESS, OR THE CARELESSNESS OF HIS EMPLOYEES.
B. MINOR DETAILS NOT USUALLY SHOWN OR SPECIFIED, BUT NECESSARY FOR PROPER CONSTRUCTION OF ANY PART OF THE WORK SHALL BE INCLUDED AS IF THEY WERE INDICATED IN THE CONTRACT DOCUMENTS.
C. THE CONTRACTOR SHALL DO ALL CUTTING, PATCHING, AND REPAIRING AS REQUIRED TO PERFORM ALL OF THE WORK INDICATED ON THE DRAWINGS, AND ALL OTHER RELATED WORK THAT MAY BE REQUIRED TO COMPLETE THE JOB.

DOCUMENT OWNERSHIP:

A. CROSSLAND ENGINEERING SHALL RETAIN TITLE, OWNERSHIP, AND COPYRIGHT OF THE MECHANICAL CONSTRUCTION DOCUMENTS AS INSTRUMENTS OF SERVICE.
B. THE GENERAL CONTRACTOR OR THEIR SUBCONTRACTORS SHALL NOT USE CROSSLAND ENGINEERING'S CONSTRUCTION DOCUMENTS TO SATISFY THEIR OBLIGATION TO PREPARE AND SUBMIT SHOP DRAWINGS OR RECORD DRAWINGS AS REQUIRED BY THE CONTRACT.

RECORD DRAWINGS:

A. THE CONTRACTOR SHALL MAINTAIN A SET OF CONTRACT DRAWINGS AT THE JOB SITE, MARKING THEM TO SHOW VARIATIONS BETWEEN THE CONSTRUCTION DOCUMENTS AND THE ACTUAL INSTALLATION.
B. THE CONTRACTOR SHALL PROVIDE OWNER WITH ACCURATE AND REPRODUCIBLE RECORD DRAWINGS OF THE INSTALLED WORK UPON COMPLETION OF WORK.
C. THE QUALITY OF THE RECORD DRAWINGS SHALL BE AS GOOD AS OR BETTER THAN THE CONTRACT DRAWINGS.

BUILDING CODES

2006 INTERNATIONAL BUILDING CODE W/ AMENDMENTS PER ROH CHAPTER 16
2006 INTERNATIONAL EXISTING BUILDING CODE W/ AMENDMENTS PER ROH CHAPTER 16
2008 NATIONAL ELECTRICAL CODE W/ AMENDMENTS PER ROH CHAPTER 17
2006 UNIFORM PLUMBING CODE W/ AMENDMENTS PER ROH CHAPTER 19
2012 NFPA 1: UNIFORM FIRE CODE W/ AMENDMENTS PER ROH CHAPTER 20
2006 INTERNATIONAL ENERGY CONSERVATION CODE W/ AMENDMENTS PER ROH CHAPTER 32

2004 ADAAG & 2010 ADA STANDARDS FOR ACCESSIBLE DESIGN
CONFORMANCE WITH THE DESIGN AND CONSTRUCTION REQUIREMENTS OF THE AMERICANS WITH DISABILITIES ACT ACCESSIBILITY GUIDELINES ADMINISTERED BY THE DEPARTMENT OF JUSTICE OR THE FAIR HOUSING ACT ACCESSIBILITY GUIDELINES ADMINISTERED BY THE DEPARTMENT OF HOUSING AND URBAN DEVELOPMENT SHALL BE EQUIVALENT TO MEETING THE ACCESSIBILITY OF THIS CODE.

BOARD OF WATER SUPPLY FLOW REQUIREMENTS

SEE CIVIL DRAWINGS FOR DETAILS.

CROSSLAND ENGINEERING
Big Firm Results. Small Firm Service.
3371 Loulu Street, Honolulu, HI 96822
(808) 462-8484 | info@crosslandeng.com | www.crosslandeng.com

ENGINEER:
THIS WORK WAS PREPARED BY ME OR UNDER MY SUPERVISION AND CONSTRUCTION OF THIS PROJECT WILL BE UNDER MY OBSERVATION.

ANDREW S. CROSSLAND
LICENSED PROFESSIONAL ENGINEER
No. 16028–M
HAWAII U.S.A.

EXPIRES: 4/30/2020

DEVELOPER:
CALIFORNIA INVESTMENT REGIONAL CENTER, LLC

PROJECT OWNER:
HAWAII CITY PLAZA, LP

Hawaii City Plaza
Honolulu, Hawaii
710 Sheridan Street
TMK 2-3-014: Parcels 002, 004, & 011

PERMIT SET

DATE 2019 MARCH 19

PROJECT # 15028-02

SHEET TITLE
PLUMBING NOTES AND LEGEND

SHEET NO.
P-000

REDUCED PRESSURE BACKFLOW PREVENTER SCHEDULE

MARK	SERVICE	LOCATION	TYPE	PIPE CONNECTION SIZE (IN.)	DESIGN FLOW RATE (GPM)	DESIGN FLOW RATE PRESSURE DROP (PSI)	MAXIMUM FLOW RATE (GPM)	DIMENSIONS: LENGTH (IN.)	DIMENSIONS: WIDTH (IN.)	DIMENSIONS: HEIGHT (IN.)	OPERATING WEIGHT (LBS.)	BASIS-OF-DESIGN MANUFACTURER	BASIS-OF-DESIGN MODEL NO.	REMARKS
RPBP-1	POOL	5TH FLOOR	REDUCED PRESSURE	1-1/2	30	14	48	23	6	6	16	WATTS	LF009M2QT-S	SEE NOTES

NOTES: 1. BACKFLOW PREVENTION ASSEMBLY SHALL HAVE LEAD FREE CONSTRUCTION, TWO IN-LINE, INDEPENDENT CHEK VALVES, CAPRUTED SPRINGS, REPLACEABLE CHECK SEATS WITH AN INTERMEDIATE RELIEF VALVE, AND ISOLATION VALVES. 2. ALL PIPE CONNECTIONS TO BACKFLOW PREVENTER SHALL BE MADE WITH DIELECTRIC UNIONS. 3. PROVIDE BACKFLOW PREVENTER WITH WATTS 909AGC AIR GAP FITTING. P-TRAP, PIPE, AND TERMINATE AIR GAP FITTING AT NEARBY WASTE PIPE. 4. CONTRACTOR SHALL ENSURE THAT SUFFICIENT CLEARANCE SPACE IS PROVIDED TO PROPERLY ACCESS THE METERS FOR SERVICE AND MAINTENANCE PER MANUFACTURER REQUIREMENTS.

GREASE INTERCEPTOR SCHEDULE

MARK	SERVICE	LOCATION	LIQUID CAPACITY (GALLONS)	PIPE SIZE: INLET (IN.)	PIPE SIZE: OUTLET (IN.)	DIMENSIONS: LENGTH (IN.)	DIMENSIONS: WIDTH (IN.)	DIMENSIONS: HEIGHT (IN.)	DRY TANK WEIGHT (LBS)	OPERATING WEIGHT (LBS)	BASIS-OF-DESIGN MANUFACTURER	BASIS-OF-DESIGN MODEL NO.	REMARKS
GI-1	GREASE WASTE	TRASH ROOM	1,500	4	4	162	72	57	19,300	31,800	JENSEN PRECAST	HJ1500G	SEE NOTES

NOTES: 1. EXTERIOR AND INTERIOR CONCRETE SURFACES SHALL BE COATED WITH AN APPROVED BITUMINOUS MATERIAL. 2. SUITABLE NATIVE SOIL OR GRANULAR SUB-BASE SHALL BE COMPACTED AND LEVELED TO HANDLE ANTICIPATED LOADS. CONFIRM REQUIREMENTS WITH GEOTECHNICAL PROFESSIONAL. 3. REFER TO DETAILS FOR ADDITIONAL INFORMATION.

GREASE INTERCEPTOR SIZING TABLE

ITEM NO.	QTY	FIXTURE DESCRIPTION	ITEM / FIXTURE SERVED	TRAP SIZE / FLOW	DRAINAGE FIXTURE UNITS: EACH	DRAINAGE FIXTURE UNITS: TOTAL
–	1	COMMERCIAL SPACE A	TBD, FUTURE TENANT	–	–	35.0
–	1	COMMERCIAL SPACE B	TBD, FUTURE TENANT	–	–	30.0
–	1	COMMERCIAL SPACE C	TBD, FUTURE TENANT	–	–	35.0
					TOTAL	100.0

NOTES: 1. THIS TABLE IS BASED ON THE 2006 UNIFORM PLUMBING CODE AS AMENDED BY THE CITY & COUNTY OF HONOLULU DEPARTMENT OF ENVIRONMENTAL SERVICES. 2. GREASE INTERCEPTOR IS INSTALLED TO PROVIDE PROVISIONS FOR FUTURE TENANT CONNECTION. DRAINAGE FIXTURE UNITS ABOVE ARE ALLOWANCES, SUBJECT TO CHANGE. FUTURE TENANT SHALL SUBMIT PROPER DOCUMENTATION FOR ACTUAL INSTALLED GREASE WASTE FIXTURES WHEN SPACE IS BUILT OUT.

FLOW RATE CALCULATION

DFU's less than or equal to 40: F = DFU x 0.7 = N/A

DFU's greater than 40: F = (DFU x 0.2) + 20 = 40

GREASE INTERCEPTOR SIZING CRITERIA

V (min) = F x R x S

Where:

V (min) = Minimum Grease Interceptor Operating Volume, gallons
F = Flow Rate (maximum), gallons per minute
R = Retention Time = 30 minutes
S = Storage Factor = 25 percent

Minimum Liquid Volume Capacity (gallons) = V (min) = F x 30 x 1.25 = 1,500

GREASE INTERCEPTOR SELECTION

Minimum Grease Interceptor Size Required (gallons) = 1,500

Capacity of Installed Grease Interceptor (gallons) = 1,500

ELEVATOR SUMP PUMP SCHEDULE

MARK	SERVICE	LOCATION	CONFIGURATION	FLOW RATE (GPM)	TOTAL PUMP HEAD (FT. OF WATER)	MINIMUM PUMP EFFICIENCY (%)	MOTOR DATA: MOTOR OPERATING POWER (BHP)	MOTOR DATA: NOMINAL MOTOR SIZE (HP)	MOTOR DATA: MAXIMUM MOTOR SPEED (RPM)	MOTOR DATA: MOTOR SPEED CONTROLLER TYPE	ELECTRICAL: VOLTAGE	ELECTRICAL: PHASE	ELECTRICAL: HERTZ	ELECTRICAL: FLA	OPERATING WEIGHT (LBS.)	BASIS-OF-DESIGN MANUFACTURER	BASIS-OF-DESIGN MODEL NO.	REMARKS
SP-1	ELEVATOR SUMP PIT	ELEVATORS	PACKAGED SUMP PUMP	50	14	–	–	1/2	–	N/A	120	1	60	–	40	LIBERTY PUMPS	ELV280	SEE NOTES

NOTES: 1. COMPLETE PACKAGED ELEVATOR SUMP PUMP SYSTEM WITH HEAVY-DUTY CAST IRON SUMP PUMP, CONTROL PANEL, WATER LEVEL SENSORS, AND OILTECTOR CONTROL. 2. OILTECTOR SYSTEM SHALL ACTIVATE PUMP IN ACCORDANCE WITH ASME A17.1 AND SHALL DISCHARGE ONLY WATER. 3. ON WATER RISE, THE PUMP WILL ACTIVATE WHEN THE WATER LEVEL REACHES THE "START" PROBE. PUMP WILL REMAIN ON UNTIL THE WATER LEVEL IS BELOW THE "OFF" PROBE. WHEN THE "OFF" PROBE NO LONGER SENSES WATER IT TURNS THE PUMP OFF, AIR OR OIL ARE IGNORED AND AN OIL LAYER (IF PRESENT) WILL NOT BE PUMPED OUT OF THE SUMP. IF THE LIQUID LEVEL REACHES THE "ALARM" PROBE AND MECHANICAL FLOAT, THE SYSTEM WILL DIFFERENTIATE BETWEEN WATER AND OIL AND ACTIVATE THE APPROPRIATE ALARM. 4. ALL COMPONENTS SHALL BE INSTALLED AND MOUNTED PER MANUFACTURER REQUIREMENTS.

PACKAGED SKID DOMESTIC WATER BOOSTER PUMP SCHEDULE

MARK	SERVICE	LOCATION	CONFIGURATION	SYSTEM: TOTAL FLOW CAPACITY (GPM)	SYSTEM: PRESSURE BOOST (TDH)	PUMP DATA: PUMP QUANTITY	PUMP DATA: DUTY PUMPS	PUMP DATA: FLOW RATE, EACH (GPM)	PUMP DATA: EFFICIENCY (%)	MOTOR DATA: MOTOR OPERATING POWER (BHP)	MOTOR DATA: NOMINAL MOTOR SIZE (HP)	MOTOR DATA: MAXIMUM MOTOR SPEED (RPM)	MOTOR DATA: MOTOR SPEED CONTROLLER TYPE	ELECTRICAL: VOLTAGE	ELECTRICAL: PHASE	ELECTRICAL: HERTZ	ELECTRICAL: FLA	OPERATING WEIGHT (LBS.)	BASIS-OF-DESIGN MANUFACTURER	BASIS-OF-DESIGN MODEL NO.	REMARKS
BP-1	DOMESTIC WATER	PUMP ROOM	TRIPLEX VERTICAL MULTISTAGE	340	280	3	2	170	–	–	20	3,600	VFD	208	3	60	–	2,235	ARMSTRONG	SERIES 6800 N250502S	SEE NOTES
BP-2	IRRIGATION	PUMP ROOM	DUPLEX VERTICAL MULTISTAGE	55	130	2	1	55	–	–	5	3,600	VFD	208	3	60	–	592	WILO	CO2-HELIX V50-04	SEE NOTES
HWP-1	HOT WATER CIRCULATION	5TH FLOOR	DUPLEX VERTICAL MULTISTAGE	63	140	2	1	63	–	–	5	3,600	VFD	208	3	60	–	610	WILO	CO2-HELIX V50-05	SEE NOTES

NOTES: ALL
1. PACKAGED SKID SYSTEM TO BE PROVIDED WITH FACTORY MOUNTED AND ASSEMBLED PUMPS AND CONTROL PANEL, VARIABLE SPEED DRIVES, STAINLESS STEEL HEADER FOR SUCTION AND DISCHARGE PIPING WITH ISLOATION VALVES, CHECK VALVES, PRESSURE GAUGES, SENSORS, AND OTHER NECESSARY APPURTENANCES. SYSTEM CONTROLLER SHALL HAVE GRAPHIC USER INTERFACE WITH TOUCH SCREEN. 2. PACKAGED SYSTEM SHALL BE PROVIDED WITH SINGLE POINT POWER CONNECTION AND INTEGRAL DISCONNECT SWITCH. 3. CONTRACTOR SHALL ENGAGE A FACTORY-AUTHORIZED TECHNICIAN TO PERFORM SYSTEM STARTUP, COMMISSIONING, AND PERFORMANCE TESTING. TECHNICIAN SHALL PROVIDE A REPORT TO ENGINEER FOR REVIEW AND APPROVAL.

NOTES: BP-1
1. PACKAGED SYSTEM SHALL HAVE TWO DUTY PUMPS AND ONE STANDBY PUMP WITH CONTROL LOGIC TO OPTIMIZE THE SPEED AND STAGING OF PUMPS IN COMPLIANCE WITH ASHRAE 90.1-2010, SECTION 10.4.2.A, VIA PROPORTIONAL PRESSURE CONTROL USING A PRESSURE SENSOR MOUNTED NEAR THE BOOSTER SYSTEM. BOOSTER PUMP SYSTEM CONTROLS SHALL ALSO COMPLY WITH ASHRAE 90.1-2010, SECTION 10.4.2.C THAT REQUIRES THE BOOSTER SYSTEM PUMPS TO SHUT OFF WHEN THERE IS NO FLOW. 2. PUMP COMPONENTS SHALL MEET NSF 61 & NSF 372 REQUIREMENTS FOR POTABLE WATER USE.

NOTES: BP-2
1. PACKAGED SYSTEM SHALL HAVE ONE DUTY PUMP AND ONE STANDBY PUMP WITH CONTROL LOGIC TO OPTIMIZE THE SPEED OF THE DUTY PUMP IN COMPLIANCE WITH ASHRAE 90.1-2010, SECTION 10.4.2.A, VIA PROPORTIONAL PRESSURE CONTROL USING A PRESSURE SENSOR MOUNTED NEAR THE BOOSTER SYSTEM. BOOSTER PUMP SYSTEM CONTROLS SHALL ALSO COMPLY WITH ASHRAE 90.1-2010, SECTION 10.4.2.C THAT REQUIRES THE BOOSTER SYSTEM PUMPS TO SHUT OFF WHEN THERE IS NO FLOW. 2. CONTRACTOR SHALL CONFIRM PUMP CONTROL AND IRRIGATION SYSTEM REQUIREMENTS WITH LANDSCAPE ARCHITECT AND IRRIGATION SYSTEM EQUIPMENT MANUFACTURER. APPROPRIATE INTERLOCK WITH IRRIGATION SYSTEM CONTROLLER SHALL BE PROVIDED FOR ON/OFF CONTROL AND SCHEDULING.

NOTES: HWP-1
1. PACKAGED SYSTEM SHALL HAVE ONE DUTY PUMP AND ONE STANDBY PUMP WITH CONTROL LOGIC TO OPTIMIZE THE SPEED OF THE DUTY PUMP IN COMPLIANCE WITH ASHRAE 90.1-2010, SECTION 10.4.2.A, VIA PROPORTIONAL PRESSURE CONTROL USING A PRESSURE SENSOR MOUNTED NEAR THE BOOSTER SYSTEM. 2. PUMP COMPONENTS SHALL MEET NSF 61 & NSF 372 REQUIREMENTS FOR POTABLE WATER USE. 3. PUMP SHALL BE INTERLOCKED WITH MAIN WATER HEATER CONTROLS. 4. PUMP FLOW RATE AND CIRCULATION LOOP BALANCING SHALL BE FINE-TUNED DURING TESTING, ADJUSTING, AND BALANCING PROCEDURES IN ORDER TO MAINTAIN A MAXIMUM 15°F TEMPERATURE DROP THROUGH EACH OF THE TWO THE HOT WATER CIRCULATION LOOPS.

PACKAGED SKID CONDENSING TANKLESS GAS WATER HEATER SCHEDULE

MARK	SERVICE	LOCATION	TYPE OF GAS	SYSTEM: TOTAL GAS INPUT (MBH)	SYSTEM: MIN. CONDENSING EFFICIENCY (%)	SYSTEM: EWT (°F)	SYSTEM: LWT (°F)	MODULES: MODULE QUANTITY	MODULES: GAS INPUT, EACH (MBH)	MODULES: TURNDOWN RATIO	MODULES: FLOW RATE @ 70°F RISE (GPM)	MODULES: RECOVERY @ 70°F RISE (GPH)	MODULES: MAX. FLOW RATE (GPM)	ELECTRICAL: VOLTAGE	ELECTRICAL: PHASE	ELECTRICAL: FLA	ELECTRICAL: MCA	ELECTRICAL: MOCP	DIMENSIONS: LENGTH (IN.)	DIMENSIONS: WIDTH (IN.)	DIMENSIONS: HEIGHT (IN.)	OPERATING WEIGHT (LBS.)	BASIS-OF-DESIGN MANUFACTURER	BASIS-OF-DESIGN MODEL NO.	REMARKS
WH-1	HOT WATER	5TH FLOOR	SYNTHETIC NATURAL GAS	2,700	96	70	140	2	1,350	30:1	37.4	2,244	50	120	1	18	21	25	108	70	88	3,000	AERCO	2 x INN 1350	SEE NOTES

NOTES: 1. PACKAGED SKID SYSTEM SHALL BE PROVIDED WITH FACTORY MOUNTED AND ASSEMBLED TANKLESS GAS WATER HEATER MODULES AND CONTROL PANEL, STAINLESS STEEL HEADER PIPING FOR COLD WATER, HOT WATER, HOT WATER RETURN, AND GAS, SEQUENCING VALVES, T&P RELIEF VALVES, SENSORS, CONDENSATE NEUTRALIZER, AND OTHER NECESSARY APPURTENANCES. 2. PACKAGED SYSTEM SHALL BE PROVIDED WITH SINGLE POINT POWER CONNECTION AND INTEGRAL DISCONNECT SWITCH. 3. WATER HEATER MODULES SHALL HAVE STAINLESS STEEL HELICAL FIRETUBE HEAT EXCHANGER. 4. EACH MODULE SHALL RECEIVE UNDUCTED COMBUSTION AIR DIRECTLY TO THE UNIT. 5. ALL MODULES SHALL BE COMMON VENTED USING STANDARD PVC PIPE AND FITTINGS. CONTRACTOR SHALL CONFIRM ALL COMMON VENTING REQUIREMENTS WITH THE MANUFACTURER AND SHALL ENSURE THAT COMMON VENT SYSTEM IS SIZED AND ROUTED PROPERLY TO ACCOMMODATE ACTUAL FIELD INSTALLED CONDITIONS. 6. CONTRACTOR SHALL ENGAGE A FACTORY-AUTHORIZED TECHNICIAN TO PERFORM SYSTEM STARTUP, COMMISSIONING, AND PERFORMANCE TESTING. TECHNICIAN SHALL PROVIDE A REPORT TO ENGINEER FOR REVIEW AND APPROVAL.

OUTDOOR CONDENSING TANKLESS GAS WATER HEATER SCHEDULE

MARK	SERVICE	LOCATION	TYPE OF GAS	DESIGN: GAS INPUT (MBH)	DESIGN: EWT (°F)	DESIGN: LWT (°F)	PERFORMANCE: UNIFORM ENERGY FACTOR	PERFORMANCE: TURNDOWN RATIO	PERFORMANCE: FLOW RATE @ 50°F RISE (GPM)	PERFORMANCE: MIN. FLOW RATE (GPM)	PERFORMANCE: MAX. FLOW RATE (GPM)	ELECTRICAL: VOLTAGE	ELECTRICAL: PHASE	ELECTRICAL: FLA	ELECTRICAL: MOCP	DIMENSIONS: WIDTH (IN.)	DIMENSIONS: HEIGHT (IN.)	DIMENSIONS: DEPTH (IN.)	OPERATING WEIGHT (LBS.)	BASIS-OF-DESIGN MANUFACTURER	BASIS-OF-DESIGN MODEL NO.	REMARKS
WH-2	HOT WATER	6TH FLOOR BBQ	SYNTHETIC NATURAL GAS	160	70	120	0.92	11:1	6	0.26	8	120	1	4	10	19	28	12	70	RINNAI	RUR160EN	SEE NOTES

NOTES: 1. OUTDOOR CONDENSING TANKLESS WATER HEATER SHALL CONTAIN INTEGRATED RECIRCULATION PUMP AND SHALL BE ENERGY STAR QUALIFIED. 2. WATER HEATER SHALL BE FORCED COMBUSTION, OUTDOOR USE ONLY WITH NO VENT PIPING REQUIRED WHEN INSTALLED APPROPRIATELY. 3. WATER HEATER SHALL HAVE INTEGRATED RECIRCULATION PUMP CONTROLLER AND WATER FLOW SENSOR FOR ELECTRONIC WATER CONTROL AND BY-PASS CONTROL. 4. PROVIDE WATER HEATER WITH T&P RELIEF VALVE, DRAIN VALVES, ISOLATION VALVES, CONDENSATE DRAIN NEUTRALIZER, AND OTHER NECESSARY APPURTENANCES AS REQUIRED BY THE MANUFACTURER.

EXPANSION TANK SCHEDULE

MARK	SERVICE	LOCATION	TYPE	SYSTEM VOLUME (GALLONS)	MAXIMUM WORKING PRESSURE (PSIG)	SYSTEM: MINIMUM TEMPERATURE (°F)	SYSTEM: MAXIMUM TEMPERATURE (°F)	PRESSURE (PSIG): FILL	PRESSURE (PSIG): MAXIMUM	VOLUME (GALLONS): ACCEPTANCE	VOLUME (GALLONS): TOTAL	DIMENSIONS: DIAMETER (IN.)	DIMENSIONS: HEIGHT (IN.)	OPERATING WEIGHT (LBS.)	BASIS-OF-DESIGN MANUFACTURER	BASIS-OF-DESIGN MODEL NO.	REMARKS
ET-1	HOT WATER	5TH FLOOR	BLADDER	620	150	70	140	*	150	80	80	24	59	1,000	AMTROL	ST-448C	SEE NOTES
ET-2	HOT WATER	6TH FLOOR BBQ	DIAPHRAGM	2	150	70	120	*	150	0.9	2	8	13	22	AMTROL	ST-5	SEE NOTES

NOTES: ET-1
1. EXPANSION TANK SHALL BE STEEL CONSTRUCTION WITH FACTORY CORROSION-RESISTANT COATING, HEAVY DUTY BUTYL BLADDER, AND POLYPROPYLENE LINER. 2. EXPANSION TANK SHALL HAVE STAINLESS STEEL SYSTEM CONNECTION. 3. EXPANSION TANK SHALL BE ASME CONSTRUCTION WITH FULL ACCEPTANCE REPLACEABLE BLADDER, APPROVED FOR POTABLE WATER. 4. CONTRACTOR SHALL DETERMINE THE INCOMING WATER SUPPLY PRESSURE IN THE FIELD AND PROPERLY CHARGE THE EXPANSION TANK WITH AIR TO MATCH THE INCOMING WATER SUPPLY PRESSURE.

NOTES: ET-2
1. EXPANSION TANK SHALL BE STEEL CONSTRUCTION WITH FACTORY CORROSION-RESISTANT COATING, HEAVY DUTY BUTYL DIAPHRAGM, AND ANTIMICROBIAL LINER. 2. EXPANSION TANK SHALL HAVE STAINLESS STEEL SYSTEM CONNECTION AND CONTRACTOR SHALL MAKE PIPE CONNECTION TO EXPANSION TANK WITH DIELECTRIC UNION. 3. EXPANSION TANK AND DIAPHRAGM SHALL BE APPROVED FOR POTABLE WATER. 4. CONTRACTOR SHALL DETERMINE THE INCOMING WATER SUPPLY PRESSURE IN THE FIELD AND PROPERLY CHARGE THE EXPANSION TANK WITH AIR TO MATCH THE INCOMING WATER SUPPLY PRESSURE. 5. TANK SHALL BE SUPPORTED VIA STAINLESS STEEL STRAP ANCHORED TO NEARBY WALL/STRUCTURE.

CROSSLAND ENGINEERING
Big Firm Results. Small Firm Service.
3371 Loulu Street, Honolulu, HI 96822
(808) 462-8484 | info@crosslandeng.com | www.crosslandeng.com

ENGINEER:
THIS WORK WAS PREPARED BY ME OR UNDER MY SUPERVISION AND CONSTRUCTION OF THIS PROJECT WILL BE UNDER MY OBSERVATION.

ANDREW S. CROSSLAND
LICENSED PROFESSIONAL ENGINEER
No. 16028-M
HAWAII U.S.A.

[signature]
EXPIRES: 4/30/2020

DEVELOPER:
CALIFORNIA INVESTMENT REGIONAL CENTER, LLC

PROJECT OWNER:
HAWAII CITY PLAZA, LP

Hawaii City Plaza
Honolulu, Hawaii
710 Sheridan Street
TMK 2-3-014: Parcels 002, 004, & 011

PERMIT SET

DATE 2019 MARCH 19

PROJECT # 15028-02

SHEET TITLE
PLUMBING SCHEDULES

SHEET NO.
P-001

PLUMBING ROUGH-IN SCHEDULE

FIXTURE		COLD WATER	HOT WATER	GAS	WASTE	VENT
	MINIMUM PIPE SIZE UNLESS OTHERWISE NOTED					
WC-1	WATER CLOSET (FLUSH VALVE)	1"	–	–	4"	2"
WC-2	WATER CLOSET (FLUSH VALVE)	1"	–	–	4"	2"
WC-3	WATER CLOSET (FLUSH TANK)	1/2"	–	–	4"	2"
LAV-1	LAVATORY	1/2"	–	–	1-1/2"	1-1/4"
LAV-2	LAVATORY	1/2"	–	–	1-1/2"	1-1/4"
LAV-3	LAVATORY	1/2"	1/2"	–	1-1/2"	1-1/4"
SH-1	SHOWER	1/2"	1/2"	–	2"	1-1/2"
TSH-1	TUB/SHOWER	1/2"	1/2"	–	2"	1-1/2"
SK-1	DOUBLE BOWL SINK	1/2"	1/2"	–	1-1/2"	1-1/4"
KS-1	KITCHEN SINK	1/2"	1/2"	–	1-1/2"	1-1/4"
WB-1	WASHER BOX	1/2"	1/2"	–	2"	1-1/2"
IB-1	ICE MAKER SUPPLY BOX	1/2"	–	–	–	–
GB-1	GAS SUPPLY BOX	–	–	3/4"	–	–
SS-1	SERVICE SINK	1/2"	1/2"	–	3"	1-1/2"
HB-1	HOSE BIBB	3/4"	–	–	–	–
TD-1	TRENCH DRAIN	–	–	–	4"	2"
FD-1	FLOOR DRAIN	–	–	–	2"	1-1/2"
FND-1	FUNNEL DRAIN	–	–	–	4"	2"
FS-1	FLOOR SINK	–	–	–	2"	1-1/2"
TP-1	TRAP PRIMER	1/2"	–	–	–	–

NOTES: 1. REFER TO THE PLUMBING AND ARCHITECTURAL DRAWINGS FOR ROUGH-IN LOCATIONS.

WATER AND GAS METER SCHEDULE

MARK	SERVICE	LOCATION	TYPE	PIPE CONNECTION SIZE (IN.)	WATER			GAS			DIMENSIONS			OPERATING WEIGHT (LBS.)	BASIS-OF-DESIGN MANUFACTURER	BASIS-OF-DESIGN MODEL NO.	REMARKS
					MIN. FLOW (GPM)	MAX. FLOW (GPM)	TOLERANCE	MIN. FLOW (CFH)	MAX. FLOW (CFH)	TOLERANCE	LENGTH (IN.)	WIDTH (IN.)	HEIGHT (IN.)				
CWM-1	COLD WATER	RESIDENTIAL UNITS	MULTIJET	3/4	0.5	30	±3%	–	–	–	12	4	6	4	NORGAS	MULTIMAG	SEE NOTES
CWM-2	COLD WATER	COMMERCIAL UNITS	MULTIJET	1"	0.75	50	±3%	–	–	–	16	4	6	5	NORGAS	MULTIMAG	SEE NOTES
HWM-1	HOT WATER	RESIDENTIAL UNITS	MULTIJET	3/4	0.5	30	±3%	–	–	–	12	4	6	4	NORGAS	MULTIMAG	SEE NOTES
NGM-1	NATURAL GAS	RESIDENTIAL UNITS	DIAPHRAGM	3/4	–	–	–	1.4	211	±3%	9	8	7	4	NORGAS	NG4	SEE NOTES

NOTES: ALL
1. CONTRACTOR SHALL CONFIRM AND COORDINATE ALL METER REQUIREMENTS WITH SUBMETERING EQUIPMENT VENDOR AND ELECTRICAL ENGINEER FOR A COMPLETE AND OPERATIONAL SYSTEM. 2. METER SHALL HAVE PULSE OUTPUT AND SHALL BE WIRED TO AND INTEGRATED WITH SUBMETERING PANEL AS SHOWN ON ELECTRICAL PLANS. 3. ALL PIPE CONNECTIONS TO WATER AND GAS METERS SHALL BE MADE WITH UPSTEAM AND DOWNSTREAM ISOLATION VALVES AND DIELECTRIC UNIONS. 4. CONTRACTOR SHALL ENSURE THAT SUFFICIENT CLEARANCE SPACE IS PROVIDED TO PROPERLY ACCESS THE METERS FOR SERVICE AND MAINTENANCE PER MANUFACTURER REQUIREMENTS. PROVIDE MINIMUM 24x24 ACCESS PANEL AT EACH RESIDENTIAL UNIT TO ACCESS CW, HW, AND GAS METERS. 5. CONTRACTOR SHALL ENGAGE A FACTORY-AUTHORIZED TECHNICIAN TO PERFORM SYSTEM STARTUP, COMMISSIONING, AND PERFORMANCE TESTING OF THE COMPLETE SUBMETERING SYSTEM. TECHNICIAN SHALL PROVIDE A REPORT TO ENGINEER FOR REVIEW AND APPROVAL.

NOTES: WATER
1. WATER METER SHALL MEET AWWA C708 ACCURACY REQUIREMENTS. 2. METER BODY SHALL BE LEAD FREE BRASS. 3. WATER METER SHALL BE NSF61 AND NSF 372 APPROVED FOR POTABLE WATER USE.

NOTES: GAS
1. GAS METER SHALL HAVE SEALED REGISTER.

WATER PRESSURE REGULATING VALVE SCHEDULE

MARK	SERVICE	LOCATION	TYPE	PIPE CONNECTION SIZE (IN.)	INTEGRAL LOW FLOW BY-PASS (Y/N)	PRESSURE			FLOW			DIMENSIONS			OPERATING WEIGHT (LBS.)	BASIS-OF-DESIGN MANUFACTURER	BASIS-OF-DESIGN MODEL NO.	REMARKS
						DESIGN OUTLET PRESS. (PSI)	APPROX. INLET PRESS. (PSI)	MAX. OPERATING PRESS. (PSI)	DESIGN FLOW (GPM)	MIN. FLOW (GPM)	MAX. FLOW (GPM)	LENGTH (IN.)	WIDTH (IN.)	HEIGHT (IN.)				
PRV-1	LOW ZONE COLD WATER	6TH FLOOR	PILOT OPERATED	4	Y	80	130	250	150	0	800	15	11	14	175	SINGER VALVE	106-PR-48	SEE NOTES
PRV-2	LOW ZONE HOT WATER	6TH FLOOR	PILOT OPERATED	4	Y	80	130	250	120	0	800	15	11	14	175	SINGER VALVE	106-PR-48	SEE NOTES
PRV-3	LOW ZONE HW RECIRC	5TH FLOOR	DIRECT ACTING	2	N	80	85	300	33	1	210	10	7	8	40	SINGER VALVE	106-PR	SEE NOTES
PRV-4	HIGH ZONE HW RECIRC	5TH FLOOR	DIRECT ACTING	2	N	80	130	300	30	1	210	10	7	8	40	SINGER VALVE	106-PR	SEE NOTES
PRV-5	POOL EQUIPMENT	5TH FLOOR	DIRECT ACTING	1-1/2"	N	80	130	300	30	1	125	9	6	7	20	SINGER VALVE	106-PR	SEE NOTES

NOTES: 1. PRESSURE REDUCING VALVE SHALL HAVE PILOT OPERATED FLAT DIAPHRAGM TYPE MAIN CONTROL VALVE WITH CLASS 150# FLANGED CONNECTIONS, INTEGRAL DIRECT-ACTING LOW FLOW BY-PASS. 2. MAIN VALVE BODY SHALL BE NSF 61 APPROVED FUSION BONDED EPOXY DUCTILE IRON WITH STAINLESS STEEL PILOT VALVE, PILOT FITTINGS, PILOT TUBING, ISOLATION BALL VALVES, AND PILOT STRAINER. 3. WHERE EQUIPPED, LOW FLOW BY-PASS VALVE AND APPURTENANCES SHALL BE STAINLESS STEEL. 4. MODEL 160 PILOT VALVE SHALL HAVE 20-200 PSI ADJUSTMENT RANGE. 5. ALL PIPE CONNECTIONS TO PRESSURE REDUCING VALVES SHALL BE MADE WITH UPSTEAM AND DOWNSTREAM ISOLATION VALVES. 6. CONTRACTOR SHALL ENSURE THAT SUFFICIENT CLEARANCE SPACE IS PROVIDED TO PROPERLY ACCESS THE VALVES FOR SERVICE AND MAINTENANCE PER MANUFACTURER REQUIREMENTS.

AUTOMATIC BALANCE VALVE SCHEDULE

MARK	SERVICE	LOCATION	TYPE	PIPE CONNECTION SIZE (IN.)	FLOW			PERFORMANCE			DIMENSIONS			OPERATING WEIGHT (LBS.)	BASIS-OF-DESIGN MANUFACTURER	BASIS-OF-DESIGN MODEL NO.	REMARKS
					DESIGN FLOW (GPM)	MIN. FLOW (GPM)	MAX. FLOW (GPM)	MIN. REQUIRED ΔP (PSI)	MAX. OPERATING PRESS. (PSI)	ACCURACY	LENGTH (IN.)	WIDTH (IN.)	HEIGHT (IN.)				
ABV-1	FLOOR HWR LOOPS	FLOORS 6-26	PRESSURE INDEPENDENT	3/4	3	0.5	8.5	2.3	375	±5%	9	2	6	2	BELL & GOSSETT	AF-3/4	SEE NOTES
ABV-2	LOW ZONE HW RECIRC	5TH FLOOR	PRESSURE INDEPENDENT	2	33	4	45.5	2.6	375	±5%	16	4	8	9	BELL & GOSSETT	AF-2	SEE NOTES
ABV-3	HIGH ZONE HW RECIRC	5TH FLOOR	PRESSURE INDEPENDENT	2	30	4	45.5	2.4	375	±5%	16	4	8	9	BELL & GOSSETT	AF-2	SEE NOTES

NOTES: 1. AUTOMATIC BALANCE VALVE SHALL BE BELL & GOSSETT CIRCUIT SENTRY FLO-SETTER II WITH ADJUSTABLE VALVE FLOW RATE THROUGH USE OF AN EXTERNAL HANDLE WITH GPM SCALE. VALVE HANDLE SHALL BE ROUNDED AND INCLUDE LOCKING NUT TO LOCK HANDLE IN PLACE ONE FLOW RATE IS SET. 2. VALVE BODY SHALL BE BRASS OR DUCTILE IRON CONSTRUCTION WITH STAINLESS STEEL SPRING AND HNBR DIAPHRAGM. 3. VALVE SHALL BE PROVIDED WITH INTEGRAL SHUT-OFF VALVE AND UNION TAILPIECE WITH UNION NUT. 4. VALVE SHALL HAVE TWO NPT FEMALE THREADED ACCESSORY PORTS WITH INSTALLED PRESSURE/TEMPERATURE MEASUREMENT PORTS FOR DIFFERENTIAL PRESSURE VERIFICATION.

DIGITAL THERMOSTATIC MIXING VALVE SCHEDULE

MARK	SERVICE	LOCATION	TYPE	MINIMUM RECIRC. FLOW (GPM)	MAXIMUM FLOW (GPM)	PRESSURE DROP @ MAXIMUM FLOW (PSI)	OUTLET TEMPERATURE TOLERANCE (°F)	SYSTEM				ELECTRICAL				DIMENSIONS		OPERATING WEIGHT (LBS.)	BASIS-OF-DESIGN MANUFACTURER	BASIS-OF-DESIGN MODEL NO.	REMARKS
								COLD WATER INLET (°F)	HOT WATER INLET (°F)	RECIRC. WATER INLET (°F)	HOT WATER OUTLET (°F)	VOLTAGE	PHASE	FLA	MOP	WIDTH (IN.)	HEIGHT (IN.)				
TMV-1	HOT WATER	5TH FLOOR	DIGITAL	10	165	15	±2	70	140	110	120	120	1	3	15	52	48	660	ARMSTRONG	DMC80	SEE NOTES

NOTES: 1. DIGITAL THERMOSTATIC MIXING VALVE SHALL BE SUPPLIED PRE-PIPED AND PRESSURE TESTED AS A LEAD FREE DIGITAL MIXING CENTER (DMC) COMPLETE WITH INLET HOT WATER, INLET COLD WATER, OUTLET MIXED WATER, INLET RE-CIRCULATION RETURN WATER, AND OUTLET RETURN TO WATER HEATER. 2. DMC SHALL INCLUDE CHECK VALVES, STRAINERS, THERMOMETERS, PRESSURE GAUGES, BALL VALVES, INLET HOT WATER OUTLET MIXED WATER BYPASS AND SHALL BE MOUNTED ONTO AN ENAMELED STEEL FRAME. 3. DMC SHALL COME PRE-WIRED WITH SINGLE POINT POWER CONNECTION AND INTEGRAL DISCONNECT SWITCH. 4. DIGITAL MIXING VALVE SHALL BE COMPLIANT WITH ASSE STANDARD 1017 AND SHALL BE UL LISTED. 5. CONTROLLER SHALL HAVE LCD DISPLAY INDICATING SET POINT, DELIVERED TEMPERATURE, ERROR CODES, AND ALARM CONDITIONS. 6. CONTRACTOR SHALL ENGAGE A FACTORY-AUTHORIZED TECHNICIAN TO PERFORM SYSTEM STARTUP, COMMISSIONING, AND PERFORMANCE TESTING. TECHNICIAN SHALL PROVIDE A REPORT TO ENGINEER FOR REVIEW AND APPROVAL.

CROSSLAND ENGINEERING
Big Firm Results. Small Firm Service.
1571 Liona Street, Honolulu, HI 96822
(808) 492-8484 | info@crosslandeng.com | www.crosslandeng.com

ENGINEER:
THIS WORK WAS PREPARED BY ME OR UNDER MY SUPERVISION AND CONSTRUCTION OF THIS PROJECT WILL BE UNDER MY OBSERVATION.
ANDREW S. CROSSLAND
LICENSED PROFESSIONAL ENGINEER
No. 16028-M
HAWAII U.S.A.
EXPIRES: 4/30/2020

DEVELOPER:
CALIFORNIA INVESTMENT REGIONAL CENTER, LLC

PROJECT OWNER:
HAWAII CITY PLAZA, LP

Hawaii City Plaza
Honolulu, Hawaii
710 Sheridan Street
TMK 2-3-014: Parcels 002, 004, & 011

PERMIT SET

DATE 2019 MARCH 19

PROJECT # 15028-02

SHEET TITLE
PLUMBING SCHEDULES

SHEET NO.
P-002

RESIDENTIAL PLUMBING FIXTURE SCHEDULE

MARK	FIXTURE TYPE	MANUFACTURER	COMPONENTS	MODEL NO.	FLOW RATE	DESCRIPTION
WC-3	WATER CLOSET	AMERICAN STANDARD	BOWL & TANK	2467.100	1.1 GPF	FLOOR MOUNTED WHITE VITREOUS CHINA WITH PRESSURE-ASSISTED SIPHON JET FLUSHING ACTION, EVERCLEAN SURFACE, ELONGATED BOWL, 12" ROUGH-IN, 1.1 GPF. 16-1/2" RIM HEIGHT FOR ADA COMPLIANCE.
			SEAT	5321.110	–	WHITE SOLID PLASTIC ELONGATED TOILET SEAT WITH EVERCLEAN SURFACE. TOLET SEAT SHALL HAVE SLOW-CLOSE FEATURE AND SNAP-OFF HINGES.
LAV-3	LAVATORY	AMERICAN STANDARD	BOWL	0614.000.020	–	18-1/4" L x 12-1/8" W x 6-3/4" D RECTANGULAR, WHITE VITREOUS CHINA BATHROOM SINK BOWL WITH WITH UNGLAZED RIM FOR UNDERCOUNTER MOUNTING, INTEGRAL FRONT OVERFLOW, AND MOUNTING KIT WITH TEMPLATE. ADA COMPLIANT.
		SYMMONS	FAUCET	SLS-6712-1.0-MP	1.0 GPM	CAST BRASS SINGLE HOLE DECK MOUNT BODY WITH SINGLE METAL LEVER HANDLE, 3/8" BRAIDED FLEXIBLE SUPPLY HOSES, CERAMIC DISC VALVE CARTRIDGE WITH INTEGRAL HOT LIMIT SAFETY STOP, METAL POP-UP DRAIN BODY WITH 1-1/4" TAILPIECE. PROVIDE WITH 1.0 GPM FLOW RESTRICTOR. MOUNT AT 34" AFF FOR ADA COMPLIANCE.
SH-1	SHOWER	SYMMONS	SHOWER SYSTEM	6701-2.0-145-X	2.0 GPM	SHOWER SYSTEM WITH SYMMONS TEMPTROL 4-PORT PRESSURE BALANCING MIXING VALVE. INCLUDES 5 MODE SHOWERHEAD WITH EASY TO CLEAN RUBBER NOZZLES AND ADJUSTABLE STOP SCREW. PROVIDE WITH 2.0 GPM FLOW RESTRICTOR AND INTEGRAL SERVICE STOPS.
		MIFAB	SHOWER DRAIN	F1100	–	LACQUERED CAST IRON BODY SHOWER DRAIN WITH ANCHOR FLANGE, ADJUSTABLE 5" ROUND VANDAL-PROOF STAINLESS STEEL STRAINER, AND 2" NO HUB OUTLET. PROVIDE SHOWER DRAIN WITH APPROPRIATE MEMBRANE CLAMP CONFIGURATION AND WEEPHOLES FOR WATERPROOFING. CONFIRM WATERPROOFING REQUIREMENTS WITH ARCHITECT. ADA COMPLIANT.
TSH-1	TUB/SHOWER	SYMMONS	TUB/SHOWER SYSTEM	S-6702-2.0-145-X	2.0 GPM	TUB/SHOWER SYSTEM WITH SYMMONS TEMPTROL 4-PORT PRESSURE BALANCING MIXING VALVE WITH INTEGRATED DIVERTER AND NON-DIVERTER TUB SPOUT. INCLUDES 5 MODE SHOWERHEAD WITH EASY TO CLEAN RUBBER NOZZLES AND ADJUSTABLE STOP SCREW. PROVIDE WITH 2.0 GPM FLOW RESTRICTOR AND INTEGRAL SERVICE STOPS.
KS-1	DOUBLE BOWL KITCHEN SINK	ELKAY	BOWL	ELUHAD311855PD	–	ELKAY LUSTERTONE STAINLESS STEEL 30-3/4" X 18-1/2" X 5-3/8", DOUBLE BOWL, UNDERMOUNT ADA SINK WITH PERFECT DRAIN. SINK IS MANUFACTURED FROM 18 GAUGE 304 STAINLESS STEEL WITH LUSTERTONE FINISH, REAR CENTER DRAIN PLACEMENT, AND FULL SPRAY SIDES AND BOTTOM. MOUNT AT 34" AFF FOR ADA COMPLIANCE.
		ELKAY	FAUCET	LK6000	1.5 GPM	ELKAY SINGLE HOLE DECK MOUNT EVERYDAY KITCHEN FAUCET WITH PULL-DOWN SPRAY FORWARD ONLY LEVER HANDLE. CHROME PLATED BRASS CONSTRUCTION WITH CERAMIC DISC VALVE AND 3/8" SUPPLY HOSE ASSEMBLY. FAUCET FLOW RATE IS 1.5 GPM. ADA COMPLIANT.
WB-1	WASHER BOX	GUY GRAY	–	T200TPPVCHA	–	WHITE POWDER COATED 20 GA. COLD ROLLED STEEL RECESSED WASHING MACHINE OUTLET BOX WITH 1/2", QTR. TURN COLD AND HOT WATER SUPPLY VALVES, INTEGRAL WATER HAMMER ARRESTORS, AND CENTER 2" PVC DRAIN FITTING. PROVIDE FIRE RATED BOX WHERE REQUIRED FOR APPLICATION.
IB-1	ICE MAKER SUPPLY BOX	GUY GRAY	–	MIB1HAAB	–	WHITE POWDER COATED RECESSED ICE MAKER SUPPLY BOX WITH LEAD-FREE 1/2", QTR. TURN COLD WATER SUPPLY VALVE AND INTEGRAL WATER HAMMER ARRESTOR. PROVIDE FIRE RATED BOX WHERE REQUIRED FOR APPLICATION.
GB-1	GAS SUPPLY BOX	GUY GRAY	–	SSGB34IP	–	STAINLESS STEEL RECESSED GAS OUTLET BOX WITH 3/4", QTR. TURN GAS SUPPLY VALVE. PROVIDE FIRE RATED BOX WHERE REQUIRED FOR APPLICATION.

PLUMBING ACCESSORIES SCHEDULE

MARK	FIXTURE TYPE	MANUFACTURER	COMPONENTS	MODEL NO.	FLOW RATE	DESCRIPTION
FCO-1	FLOOR CLEANOUT	MIFAB	–	C1100	–	LACQUERED CAST IRON BODY FLOOR CLEANOUT WITH ANCHOR FLANGE, ADJUSTABLE 5" ROUND VANDAL-PROOF NICKEL BRONZE COVER, GASKET SEALS, AND NO HUB OUTLET. WHERE REQUIRED, PROVIDE FLOOR CLEANOUT WITH APPROPRIATE MEMBRANE CLAMP CONFIGURATION AND WEEPHOLES FOR WATERPROOFING. CONFIRM WATERPROOFING REQUIREMENTS WITH ARCHITECT.
COTG-1	CLEANOUT TO GRADE (VEHICLE RATED)	MIFAB	–	C1100-XR	–	LACQUERED CAST IRON BODY FLOOR CLEANOUT WITH ANCHOR FLANGE, ADJUSTABLE 5" ROUND VANDAL-PROOF HEAVY DUTY STAINLESS STEEL COVER ANSI/ASME RATED UP TO 7,500 LBS., GASKET SEALS, AND NO HUB OUTLET. WHERE REQUIRED, PROVIDE FLOOR CLEANOUT WITH APPROPRIATE MEMBRANE CLAMP CONFIGURATION AND WEEPHOLES FOR WATERPROOFING. CONFIRM WATERPROOFING REQUIREMENTS WITH ARCHITECT.
WCO-1	WALL CLEANOUT	MIFAB	–	C1440	–	EXPANDABLE LINE CLEANOUT PLUG WITH TAPPING AND ROUND, SMOOTH STAINLESS STEEL ACCESS COVER. PROVIDE SIZE EQUAL TO CONNECTED PIPE AND CORRESPONDING COVER DIAMETER.
TBV-1	THERMOSTATIC BALANCING VALVE	THERM OMEGA TECH	–	CIRCUIT SOLVER CSUAS-3/4-110-CV1	–	SELF-ACTING THERMOSTATIC RECIRCULATION VALVE WHICH AUTOMATICALLY AND CONTINUOUSLY MAINTAINS THE END OF EACH DOMESTIC HOT WATER FLOOR SUPPLY LOOP AT THE SPECIFIED WATER TEMPERATURE. VALVE SHALL BE STAINLESS STEEL CONSTRUCTION, 3/4" PIPE SIZE, AND CONFIGURED WITH UPSTREAM AND DOWNSTREAM ISOLATION VALVES. ASSEMBLY SHALL INCLUDE INTEGRATED UNION FITTING, STRAINER, AND CHECK VALVE. LEAD FREE AND NSF 61 CERTIFIED. OUTLET TEMPERATURE SETPOINT SHALL BE 110°F.
REG-1	GAS PRESSURE REGULATING VALVE	NORGAS	–	N5D	–	SELF-OPERATING REGULATOR WITH VENT LIMITING OPTION ALLOWING FOR INDOOR USE WITHOUT THE NEED TO PIPE EXTERNAL VENT LINE. VALVE HOUSING SHALL BE CONSTRUCTED OF EPOXY COATED ALUMINUM WITH REINFORCED BUNA N DIAPHRAGM AND VALVE SEAT. VALVE SHALL BE 2" PIPE SIZE WITH VENT LIMITER AND 7-11" W.C. CSA CERTIFIED SPRING. PROVIDE VENT ELBOW WHERE REQUIRED.
GSV-1	GAS EARTHQUAKE SHUTOFF VALVE	PACIFIC SEISMIC PRODUCTS	–	317F	–	EARTHQUAKE SENSITIVE GAS SHUT-OFF VALVE IS INTENDED TO CLOSE IN THE EVENT OF AN EARTHQUAKE TO PREVENT GAS FLOW INTO A STRUCTURE WHERE EARTHQUAKE DAMAGE MAY HAVE OCCURRED. THE VALVE SHALL CONSIST OF A SWING CHECK VALVE ARRANGEMENT WITH AN ACCELERATION-SENSITIVE TRIGGERING MECHANISM. VALVE SHALL HAVE 6" PIPE SIZE WITH VISUAL STATUS WINDOW AND MANUAL RESET.
AAV-1	AUTOMATIC AIR VENT	SPIROTHERM	–	SPIROTOP VTP	–	LOW PROFILE, HIGH COMPRESSION AIR RELEASE VALVE WITH DRY VENT DESIGN AND THREADED INLET AND OUTLET CONNECTIONS.
WHA-1	WATER HAMMER ARRESTOR	PRECISION PLUMBING PRODUCTS		SWA-500A THRU SWA-2000F	–	BARREL-FABRICATED FLUID HAMMER ARRESTOR CONSTRUCTED OF TYPE "L" HARD DRAWN COPPER WITH KWIK-PRESS ADAPTER. PROVIDE APPROPRIATE SIZE FOR EACH CONDITION AS DETERMINED BY 2010 PDI-WH 201 PUBLICATION.
TP-1	TRAP PRIMER	PRECISION PLUMBING PRODUCTS	–	PR-500	–	AUTOMATIC PRESSURE DROP ACTIVATED TRAP PRIMER VALVE MACHINED FROM 360 CORROSION RESISTANT BRASS. PROVIDE WITH DISTRIBUTION UNIT WHEN SERVING MULTIPLE FLOOR DRAINS.

COMMON & PUBLIC PLUMBING FIXTURE SCHEDULE

MARK	FIXTURE TYPE	MANUFACTURER	COMPONENTS	MODEL NO.	FLOW RATE	DESCRIPTION
WC-1	WATER CLOSET	SLOAN	BOWL	WETS 2001.1101-1.1 ECOS	–	FLOOR MOUNTED WHITE VITREOUS CHINA WITH SIPHON JET FLISHING ACTION, 1-1/2" TOP SPUD INLET, 2-1/8" FULLY GLAZED TRAPWAY, AND INTEGRAL FLUSHING RIM.
			VALVE		1.1 GPF	QUIET, EXPOSED, BATTERY POWERED, INFRARED SENSOR ACTIVATED FLUSHOMETER VALVE WITH DUAL FILTERED BYPASS DIAPHRAGM, CHROME PLATED FLUSHOMETER VALVE, VACUUM BREAKER, FOUR SIZE AA BATTERIES, ADA COMPLIANT. 1.1 GPF FLUSH CYCLE.
		BEMIS	SEAT	2155SSCT	–	OPEN FRONT LESS COVER, ELONGATED, HEAVY-DUTY, INJECTION MOLDED SOLID PLASTIC TOILET SEAT. FEATURE FOUR MOLDED-IN BUMPERS, SELF-SUSTAINING CHECK HINGES WITH NON-CORROSIVE 300 SERIES STAINLESS STEEL POSTS AND PINTLES AND STA-TITE COMMERCIAL FASTENING SYSTEM. SEAT CONTAINS DURAGUARD ANTIMICROBIAL BUILT-IN SEAT PROTECTION.
WC-2	WATER CLOSET (ACCESSIBLE)	SLOAN	BOWL	WETS-2021.1101	–	FLOOR MOUNTED WHITE VITREOUS CHINA WITH SIPHON JET FLISHING ACTION, 1-1/2" TOP SPUD INLET, 2-1/8" FULLY GLAZED TRAPWAY, AND INTEGRAL FLUSHING RIM. ADA RIM HEIGHT AT 17" AFF.
			VALVE		1.1 GPF	SAME AS WC-1
		BEMIS	SEAT	2155SSCT	–	SAME AS WC-1
LAV-1	LAVATORY (ACCESSIBLE)	KOHLER	BOWL	K-2336	–	18-1/8" X 14" WHITE VITREOUS CHINA UNDER-MOUNT BATHROOM SINK WITH OVAL BASIN AND 1-3/4" DRAIN HOLE. ADA COMPLIANT.
		KOHLER	FAUCET	K-45344-BA	0.35 GPM	SINGLE HOLE DECK MOUNTING, POLISHED CHROME MACHINED BRASS, HYBRID ENERGY CELL, SENSOR ACTIVATED LAVATORY FAUCET WITH VANDAL-RESISTANT AERATOR, 24" FLEXIBLE SUPPLY HOSES, AND 5-3/4" SPOUT REACH. PROVIDE INSULATED SAFETY SHIELDS ON P-TRAP AND WATER SUPPLY HOSES FOR ADA COMPLIANCE. 0.35 GPM FLOW RATE.
LAV-2	LAVATORY (ACCESSIBLE)	KOHLER	BOWL	K-1999-1	–	21-15/16" X 19-3/4" WHITE VITREOUS CHINA WALL-MOUNT BATHROOM SINK WITH P-TRAP SHROUD, SINGLE-HOLE CONFIGURATION, INTEGRAL OVERFLOW, AND HANGER. MOUNT AT 34" AFF FOR ADA COMPLIANCE.
		KOHLER	FAUCET	K-45344-BA	0.35 GPM	SAME AS LAV-1
SK-1	DOUBLE BOWL SINK (ACCESSIBLE)	ELKAY	BOWL	ELUHAD311855PD	–	ELKAY LUSTERTONE STAINLESS STEEL 30-3/4" X 18-1/2" X 5-3/8", DOUBLE BOWL, UNDERMOUNT ADA SINK WITH PERFECT DRAIN. SINK IS MANUFACTURED FROM 18 GAUGE 304 STAINLESS STEEL WITH LUSTERTONE FINISH, REAR CENTER DRAIN PLACEMENT, AND FULL SPRAY SIDES AND BOTTOM. PROVIDE WITH INSULATED SAFETY SHIELDS ON P-TRAP AND WATER SUPPLY, AND MOUNT AT 34" AFF FOR ADA COMPLIANCE.
		ELKAY	FAUCET	LK6000	1.5 GPM	ELKAY SINGLE HOLE DECK MOUNT EVERYDAY KITCHEN FAUCET WITH PULL-DOWN SPRAY FORWARD ONLY LEVER HANDLE. CHROME PLATED BRASS CONSTRUCTION WITH CERAMIC DISC VALVE AND 3/8" SUPPLY HOSE ASSEMBLY. FAUCET FLOW RATE IS 1.5 GPM. ADA COMPLIANT.
SS-1	SERVICE SINK	KOHLER	BOWL	K-6710	–	28" X 28" X 13" FLOOR MOUNTED CAST IRON CORNER BASIN SERVICE SINK WITH ACID-RESISTANT ENAMEL FINISH, SINK RIM GUARD, AND 3" WASTE OUTLET.
		KOHLER	FAUCET	K-8907	2.2 GPM	POLISHED CHROME CAST BRASS, 8" CENTER SERVICE SINK FAUCET WITH VACUUM BREAKER, PAIL HOOK, WALL BRACE, ADA COMPLIANT LEVER HANDLES, AND 4-5/8" THREADED SPOUT FOR 3/4" HOSE CONNECTION.
HB-1	HOSE BIBB	MIFAB	–	MHY-9000-NPB	–	EXPOSED TYPE, LOW LEAD, MILD CLIMATE, ANTI-CONTAMINATION ROUGH BRONZE, WALL FAUCET WITH 3/4" MALE HOSE CONNECTION AND ANTI-SIPHON VACUUM BREAKER. EXTERIOR FINISH TO BE ROUGH BRONZE. OPERATING HANDLE SHALL BE LOOSE KEY. PROVIDE WITH 3/4" INLET CONNECTION.
TD-1	TRENCH DRAIN	MIFAB	–	T1320-FL	–	6" WIDE, 6-3/4" DEEP, 20" LONG NON-SLOPED MODULAR TRENCH DRAIN WITH LACQUERED CAST IRON BODY SECTIONS. BODIES HAVE RECESSED 2" WIDE ANCHOR FLANGE WITH RADIUSED BOTTOM AND FLANGED ENDS TO CONNECT TO EACH OTHER WITH A NEOPRENE RUBBER GASKET. TRENCH DRAIN SHALL HAVE CLASS E SPECIAL DUTY LOAD RATED DUCTILE IRON GRATE WITH VANDAL-PROOF LOCKDOWN HARDWARE TO SECURE GRATE TO THE BODY. PROVIDE WITH DOME BOTTOM OUTLET STRAINER, 4" NO HUB OUTLET, AND CAST IRON END CAPS..
PD-1	PARKING DRAIN	MIFAB	–	F1530	–	LACQUERED CAST IRON AREA DRAIN INCLUDING ANCHOR FLANGE, FIXED 16" DIAMETER HEAVY DUTY MEMBRANE COLLAR WITH WEEPHOLES, AND 1" THICK, 9" ROUND, DUCTILE IRON TRACTOR GRATE. PROVIDE WITH NO HUB OUTLET AND PIPE SIZE AS SHOWN ON PLANS.
AD-1	AREA DRAIN	MIFAB	–	R1100-PR	–	LACQUERED CAST IRON AREA DRAIN INCLUDING ANCHOR FLANGE, CAST IRON WATERPROOFING MEMBRANE CLAMP RING WITH WEEPHOLES, AND 1" THICK, 8" SQUARE ADJUSTABLE DUCTILE IRON TRACTOR GRATE. PROVIDE WITH 2" NO HUB OUTLET AND UNDERDECK CLAMP.
RD-1	ROOF DRAIN	MIFAB	–	R1100-EU	–	LACQUERED CAST IRON ROOF DRAIN INCLUDING ANCHOR FLANGE, CAST IRON WATERPROOFING MEMBRANE CLAMP RING WITH WEEPHOLES, ADJUSTABLE CAST IRON EXTENSION FLANGE, UNDERDECK CLAMP, AND SELF-LOCKING POLYETHYLENE DOME STRAINER. PROVIDE WITH 4" NO HUB OUTLET.
SD-1	SUMP DRAIN	–	–	–	–	SEE POOL CONSULTANT DRAWINGS.
FD-1	FLOOR DRAIN	MIFAB	–	F1100	–	LACQUERED CAST IRON BODY FLOOR DRAIN WITH ANCHOR FLANGE, ADJUSTABLE 5" ROUND VANDAL-PROOF NICKEL BRONZE STRAINER, 2" NO HUB OUTLET, AND 1/2" TRAP SEAL PRIMER CONNECTION. PROVIDE FLOOR DRAIN WITH APPROPRIATE MEMBRANE CLAMP CONFIGURATION AND WEEPHOLES FOR WATERPROOFING. CONFIRM WATERPROOFING REQUIREMENTS WITH ARCHITECT.
FND-1	FUNNEL DRAIN	MIFAB	–	MI-950-F	–	LACQUERED CAST IRON DEEP SEAL TRAP WITH FUNNEL DRAIN, WITH 1/2" TRAP SEAL PRIMER TAPPING AND CAST IRON PLUG, 3/4" LOW FLUSHING TAPPING AND BRONZE PLUGM, AND 1-1/4" BOTTOM BRONZE CLEANOUT PLUG. 4" PIPE SIZE.
FS-1	FLOOR SINK	MIFAB	–	FS1730	–	12" x 12" x 8" DEEP CAST IRON FLOOR SINK WITH WHITE ACID RESISTANT PORCELAIN ENAMEL COATED INTERIOR, FULL LOOSE SET GRATE, ANTI-SPLASH ALUMINUM DOME STRAINER, 2" NO HUB OUTLET, AND 1/2" TRAP SEAL PRIMER CONNECTION. PROVIDE FLOOR SINK WITH APPROPRIATE FLANGE AND MEMBRANE CLAMP CONFIGURATION WITH WEEPHOLES FOR WATERPROOFING. CONFIRM WATERPROOFING REQUIREMENTS WITH ARCHITECT.

FIXTURE NOTES

1. CONTRACTOR SHALL PROVIDE ALL COMPONENTS NECESSARY FOR A COMPLETE PLUMBING SYSTEM AND FIXTURE ASSEMBLY INCLUDING ANGLE STOPS, P-TRAPS, ESCUTCHEONS, CARRIERS, ETC.
2. CONFIRM MAKE AND MODEL OF EACH WATER CLOSET, LAVATORY, SHOWER, TUB/SHOWER, AND SINK WITH THE DEVELOPER AND DESIGN TEAM PRIOR TO BIDDING AND CONSTRUCTION.

CROSSLAND ENGINEERING
Big Firm Results. Small Firm Service.
3371 Loulu Street, Honolulu, HI 96822
(808) 462-8484 | info@crosslandeng.com | www.crosslandeng.com

ENGINEER:
THIS WORK WAS PREPARED BY ME OR UNDER MY SUPERVISION AND CONSTRUCTION OF THIS PROJECT WILL BE UNDER MY OBSERVATION.

ANDREW S. CROSSLAND
LICENSED PROFESSIONAL ENGINEER
No. 16028-M
HAWAII U.S.A.

EXPIRES: 4/30/2020

DEVELOPER:
CALIFORNIA INVESTMENT REGIONAL CENTER, LLC

PROJECT OWNER:
HAWAII CITY PLAZA, LP

Hawaii City Plaza
Honolulu, Hawaii
710 Sheridan Street
TMK 2-3-014: Parcels 002, 004, & 011

PERMIT SET

DATE 2019 MARCH 19

PROJECT # 15028-02

SHEET TITLE
PLUMBING SCHEDULES

SHEET NO.
P-003



1 OVERALL PLUMBING PLAN - LEVEL 01
SCALE: 3/32" = 1'-0"

SHEET NOTES

1. CONTRACTOR SHALL DETERMINE THE LOCATION AND SIZE OF ALL OPENINGS THROUGH UNDERGROUND STRUCTURAL ELEMENTS REQUIRED FOR PLUMBING PIPING. REQUIRED OPENINGS SHALL BE COORDINATED WITH OTHER TRADES. SEE STRUCTURAL DRAWINGS FOR PENETRATION DETAILS.
2. REFER TO ISOMETRIC PIPING DIAGRAMS ON SHEETS P-401 THRU P-415 FOR ADDITIONAL PIPE SIZES AND INFORMATION.
3. SEE ARCHITECTURAL DRAWINGS FOR EXACT LOCATION OF PLUMBING FIXTURES AND ADDITIONAL MOUNTING INFORMATION.
4. CONTRACTOR SHALL PROVIDE ACCESS PANELS FOR ANY WATER HAMMER ARRESTOR, VALVE, TRAP PRIMER, AUTOMATIC AIR VENT, FUNNEL DRAIN, OR OTHER COMPONENT REQUIRING ACCESS WHICH IS LOCATED BEHIND AN INACCESSIBLE WALL OR CEILING.
5. INSTALL GAS PIPING WITH DRIP LEGS AT LOW POINTS IN THE SYSTEM AND POINTS WHERE CONDENSATE MAY COLLECT, INCLUDING SERVICE-METER OUTLETS. WHERE SEDIMENT TRAP IS NOT INCORPORATED AS PART OF THE APPLIANCE, INSTALL A SEDIMENT TRAP DOWNSTREAM OF THE APPLIANCE SHUTOFF VALVE AS CLOSE TO THE INLET OF THE APPLIANCE AS PRACTICAL. INSTALL GAS PIPING AT UNIFORM GRADE OF 2% DOWN TOWARD DRIP LEGS AND SEDIMENT TRAPS. CONNECT GAS PIPING TO EQUIPMENT USING UL LISTED GAS SHUTOFF VALVE AND PIPE UNION OR FLANGE FITTING. FIELD INSTALL INDIVIDUAL GAS PRESSURE REGULATORS WHERE REQUIRED BY EQUIPMENT MANUFACTURERS.

KEY NOTES

1. INSTALL NEW PACKAGED SKID BOOSTER PUMP SYSTEM PER MANUFACTURER INSTRUCTIONS WITH REQUIRED SERVICE CLEARANCES. EQUIPMENT BASE SHALL BE MOUNTED AND ANCHORED TO A MINIMUM 4" THICK CONCRETE PAD. ANCHORING SYSTEM SHALL BE SUBMITTED AS A DELEGATED-DESIGN, STAMPED BY A HAWAII LICENSED STRUCTURAL ENGINEER. PROVIDE NEOPRENE WAFFLE VIBRATION ISOLATION PADS. ALL PIPE CONNECTIONS TO DISSIMILAR METAL PIPING AT PACKAGED SYSTEM PIPE HEADER FLANGED CONNECTIONS SHALL BE MADE WITH DIELECTRIC FLANGE FITTINGS. INSTALL ANY APPURTENANCES REQUIRED BY MANUFACTURER FOR A COMPLETE WORKING SYSTEM.
2. INSTALL SUMP PUMP PER MANUFACTURER INSTRUCTIONS. SEE DETAIL X/X-XXX FOR ADDITIONAL INSTALLATION INFORMATION. DISCHARGE LINE SHALL BE PROVIDED WITH A SWING CHECK VALVE AND A FULL PORT BALL VALVE. METHOD OF CONNECTION TO HORIZONTAL DRAIN LINE SHALL BE FROM THE TOP THROUGH A WYE BRANCH FITTING.
3. INSTALL 1,500 GALLON GREASE INTERCEPTOR AND SAMPLING BOX UNDERGROUND PER MANUFACTURER INSTRUCTIONS. SEE DETAIL X/X-XXX FOR ADDITIONAL INSTALLATION INFORMATION.
4. CONTRACTOR SHALL COORDINATE ALL NECESSARY REQUIREMENTS FOR MEDIUM PRESSURE NATURAL GAS SYSTEM WITH HAWAII GAS. CONNECT TO GAS UTILITY IN ACCORDANCE WITH THEIR REQUIREMENTS.

CROSSLAND ENGINEERING
Big Firm Results. Small Firm Service.
1211 Lucas Street, Honolulu, HI 96822
808.462.4646 | info@crosslandeng.com www.crosslandeng.com

ENGINEER:
THIS WORK WAS PREPARED BY ME OR UNDER MY SUPERVISION AND CONSTRUCTION OF THIS PROJECT WILL BE UNDER MY OBSERVATION.

ANDREW S. CROSSLAND
LICENSED PROFESSIONAL ENGINEER
No. 16028-M
HAWAII U.S.A.

EXPIRES: 4/30/2020

DEVELOPER:
CALIFORNIA INVESTMENT REGIONAL CENTER, LLC

PROJECT OWNER:
HAWAII CITY PLAZA, LP

Hawaii City Plaza
Honolulu, Hawaii
710 Sheridan Street
TMK 2-3-014: Parcels 002, 004, & 011

PERMIT
SET

DATE 2019 MARCH 19

PROJECT # 15028-02

SHEET TITLE
OVERALL PLUMBING PLAN - LEVEL 01

SHEET NO.
P-101

SHEET NOTES

1. REFER TO ISOMETRIC PIPING DIAGRAMS ON SHEETS P-401 THRU P-415 FOR ADDITIONAL PIPE SIZES AND INFORMATION.



1 OVERALL PLUMBING PLAN - LEVEL 01 MEZZ
SCALE: 3/32" = 1'-0"

8 4 0 8 16

CROSSLAND ENGINEERING
Big Firm Results. Small Firm Service.

ENGINEER:
THIS WORK WAS PREPARED BY ME OR UNDER MY SUPERVISION AND CONSTRUCTION OF THIS PROJECT WILL BE UNDER MY OBSERVATION.

ANDREW S. CROSSLAND
LICENSED PROFESSIONAL ENGINEER
No. 16028-M
HAWAII U.S.A.

EXPIRES: 4/30/2020

DEVELOPER:
CALIFORNIA INVESTMENT REGIONAL CENTER, LLC

PROJECT OWNER:
HAWAII CITY PLAZA, LP

Hawaii City Plaza
Honolulu, Hawaii
710 Sheridan Street
TMK 2-3-014: Parcels 002, 004, & 011

PERMIT SET

DATE 2019 MARCH 19

PROJECT # 15028-02

SHEET TITLE
OVERALL PLUMBING PLAN - LEVEL 01 MEZZ

SHEET NO.
P-102

SHEET NOTES

1. REFER TO ISOMETRIC PIPING DIAGRAMS ON SHEETS P-401 THRU P-415 FOR ADDITIONAL PIPE SIZES AND INFORMATION.

1 OVERALL PLUMBING PLAN - LEVEL 02
SCALE: 3/32" = 1'-0"

8 4 0 8 16

CROSSLAND ENGINEERING
Big Firm Results. Small Firm Service.

ENGINEER:

THIS WORK WAS PREPARED BY ME OR UNDER MY SUPERVISION AND CONSTRUCTION OF THIS PROJECT WILL BE UNDER MY OBSERVATION.

ANDREW S. CROSSLAND
LICENSED PROFESSIONAL ENGINEER
No. 16028-M
HAWAII U.S.A.

EXPIRES: 4/30/2020

DEVELOPER:
CALIFORNIA INVESTMENT REGIONAL CENTER, LLC

PROJECT OWNER:
HAWAII CITY PLAZA, LP

Hawaii City Plaza
Honolulu, Hawaii

710 Sheridan Street
TMK 2-3-014: Parcels 002, 004, & 011

PERMIT SET

DATE 2019 MARCH 19

PROJECT # 15028-02

SHEET TITLE
OVERALL PLUMBING PLAN - LEVEL 02

SHEET NO.
P-103

SHEET NOTES

1. REFER TO ISOMETRIC PIPING DIAGRAMS ON SHEETS P-401 THRU P-415 FOR ADDITIONAL PIPE SIZES AND INFORMATION.

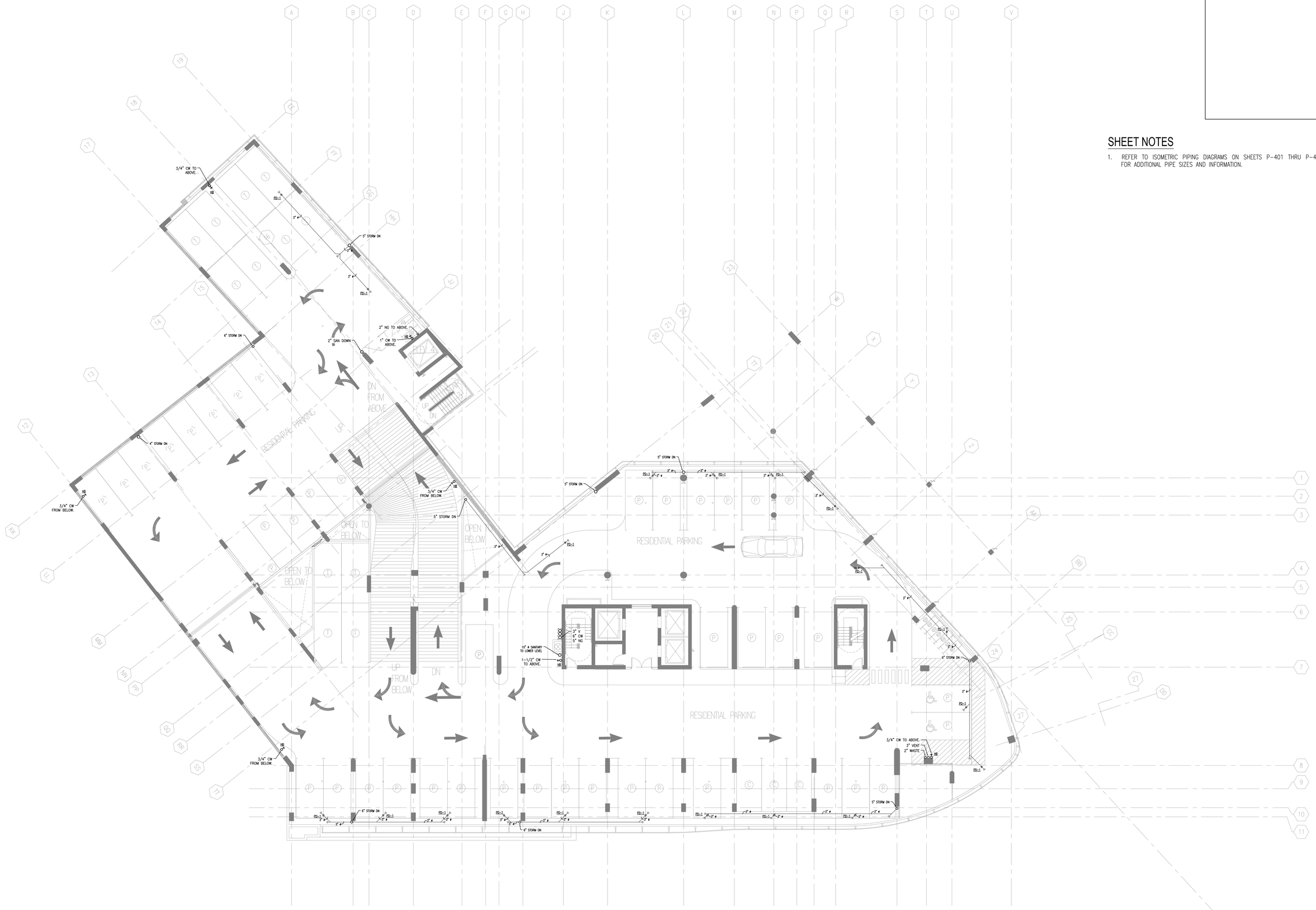

1 OVERALL PLUMBING PLAN - LEVEL 03-04
SCALE: 3/32" = 1'-0"

8 4 0 8 16

CROSSLAND ENGINEERING
Big Firm Results. Small Firm Service.

ENGINEER:
THIS WORK WAS PREPARED BY ME OR UNDER MY SUPERVISION AND CONSTRUCTION OF THIS PROJECT WILL BE UNDER MY OBSERVATION.

ANDREW S. CROSSLAND
LICENSED PROFESSIONAL ENGINEER
No. 16028-M
HAWAII U.S.A.

EXPIRES: 4/30/2020

DEVELOPER:
CALIFORNIA INVESTMENT REGIONAL CENTER, LLC

PROJECT OWNER:
HAWAII CITY PLAZA, LP

Hawaii City Plaza
Honolulu, Hawaii
710 Sheridan Street
TMK 2-3-014: Parcels 002, 004, & 011

PERMIT SET

DATE 2019 MARCH 19

PROJECT # 15028-02

SHEET TITLE
OVERALL PLUMBING PLAN - LEVEL 03-04

SHEET NO.
P-104



SHEET NOTES

1. REFER TO ISOMETRIC PIPING DIAGRAMS ON SHEETS P-401 THRU P-415 FOR ADDITIONAL PIPE SIZES AND INFORMATION.

2. INSTALL GAS PIPING WITH DRIP LEGS AT LOW POINTS IN THE SYSTEM AND POINTS WHERE CONDENSATE MAY COLLECT. WHERE SEDIMENT TRAP IS NOT INCORPORATED AS PART OF THE APPLIANCE, INSTALL A SEDIMENT TRAP DOWNSTREAM OF THE APPLIANCE SHUTOFF VALVE AS CLOSE TO THE INLET OF THE APPLIANCE AS PRACTICAL. INSTALL GAS PIPING AT UNIFORM GRADE OF 2% DOWN TOWARD DRIP LEGS AND SEDIMENT TRAPS. CONNECT GAS PIPING TO EQUIPMENT USING UL LISTED GAS SHUTOFF VALVE AND PIPE UNION OR FLANGE FITTING, FIELD INSTALL INDIVIDUAL GAS PRESSURE REGULATORS WHERE REQUIRED BY EQUIPMENT MANUFACTURERS.

KEY NOTES

(1) INSTALL NEW PACKAGED GAS WATER HEATER SYSTEM PER MANUFACTURER INSTRUCTIONS WITH REQUIRED SERVICE CLEARANCES. EQUIPMENT BASE SHALL BE MOUNTED AND ANCHORED TO A MINIMUM 4" THICK CONCRETE PAD. ANCHORING SYSTEM SHALL BE SUBMITTED AS A DELEGATED-DESIGN, STAMPED BY A HAWAII LICENSED STRUCTURAL ENGINEER. ALL PIPE CONNECTIONS TO DISSIMILAR METAL PIPING AT PACKAGED SYSTEM PIPE HEADER FLANGED CONNECTIONS SHALL BE MADE WITH DIELECTRIC FLANGE FITTINGS. CONTRACTOR SHALL PIPE ALL DRAIN CONNECTIONS, T&P RELIEF VALVES, AND CONDENSATE DRAIN TO ADJACENT FLOOR SINK. INSTALL ANY APPURTENANCES REQUIRED BY MANUFACTURER FOR A COMPLETE WORKING SYSTEM.

(2) EACH WATER HEATER MODULE SHALL RECEIVE UNDUCTED COMBUSTION AIR DIRECTLY TO THE UNIT. BOTH WATER HEATER MODULES SHALL BE COMMON VENTED USING STANDARD PVC PIPE AND FITTINGS. CONTRACTOR SHALL CONFIRM ALL COMMON VENTING REQUIREMENTS WITH THE MANUFACTURER AND SHALL ENSURE THAT COMMON VENT SYSTEM IS SIZED AND ROUTED PROPERLY TO ACCOMMODATE ACTUAL FIELD INSTALLED CONDITIONS.

(3) INSTALL NEW PACKAGED SKID HOT WATER CIRCULATION PUMP SYSTEM PER MANUFACTURER INSTRUCTIONS WITH REQUIRED SERVICE CLEARANCES. EQUIPMENT BASE SHALL BE MOUNTED AND ANCHORED TO A MINIMUM 4" THICK CONCRETE PAD. ANCHORING SYSTEM SHALL BE SUBMITTED AS A DELEGATED-DESIGN, STAMPED BY A HAWAII LICENSED STRUCTURAL ENGINEER. PROVIDE NEOPRENE WAFFLE VIBRATION ISOLATION PADS. ALL PIPE CONNECTIONS TO DISSIMILAR METAL PIPING AT PACKAGED SYSTEM PIPE HEADER FLANGED CONNECTIONS SHALL BE MADE WITH DIELECTRIC FLANGE FITTINGS. INSTALL ANY APPURTENANCES REQUIRED BY MANUFACTURER FOR A COMPLETE WORKING SYSTEM.

(4) INSTALL NEW DIGITAL THERMOSTATIC MIXING VALVE PER MANUFACTURER INSTRUCTIONS WITH REQUIRED SERVICE CLEARANCES. EQUIPMENT FRAME SHALL BE SECURED TO THE STRUCTURAL COLUMN WITH ANCHORING SYSTEM SUBMITTED AS A DELEGATED-DESIGN, STAMPED BY A HAWAII LICENSED STRUCTURAL ENGINEER. ALL PIPE CONNECTIONS TO DISSIMILAR METAL PIPING AT PACKAGED SYSTEM PIPE CONNECTIONS SHALL BE MADE WITH DIELECTRIC FITTINGS. INSTALL ANY APPURTENANCES REQUIRED BY MANUFACTURER FOR A COMPLETE WORKING SYSTEM.

(5) INSTALL NEW EXPANSION TANK PER MANUFACTURER INSTRUCTIONS. TANK BASE SHALL BE MOUNTED AND ANCHORED TO A MINIMUM 4" THICK CONCRETE PAD. ANCHORING SYSTEM SHALL BE SUBMITTED AS A DELEGATED-DESIGN, STAMPED BY A HAWAII LICENSED STRUCTURAL ENGINEER. PIPE CONNECTION TO EXPANSION TANK SHALL BE MADE WITH DIELECTRIC UNION FITTING.

1 OVERALL PLUMBING PLAN - LEVEL 05
SCALE: 3/32" = 1'-0"

8 4 0 8 16

CROSSLAND ENGINEERING
Big Firm Results. Small Firm Service.
87[illegible] Lewers Street, Honolulu, HI 96815
(808) 462-8484 | info@crosslandeng.com | www.crosslandeng.com

ENGINEER:
THIS WORK WAS PREPARED BY ME OR UNDER MY SUPERVISION AND CONSTRUCTION OF THIS PROJECT WILL BE UNDER MY OBSERVATION.

ANDREW S. CROSSLAND
LICENSED PROFESSIONAL ENGINEER
No. 16028-M
HAWAII U.S.A.

EXPIRES: 4/30/2020

DEVELOPER:
CALIFORNIA INVESTMENT REGIONAL CENTER, LLC

PROJECT OWNER:
HAWAII CITY PLAZA, LP

Hawaii City Plaza
Honolulu, Hawaii
710 Sheridan Street
TMK 2-3-014: Parcels 002, 004, & 011

PERMIT SET

DATE 2019 MARCH 19

PROJECT # 15028-02

SHEET TITLE
OVERALL PLUMBING PLAN - LEVEL 05

SHEET NO.
P-105

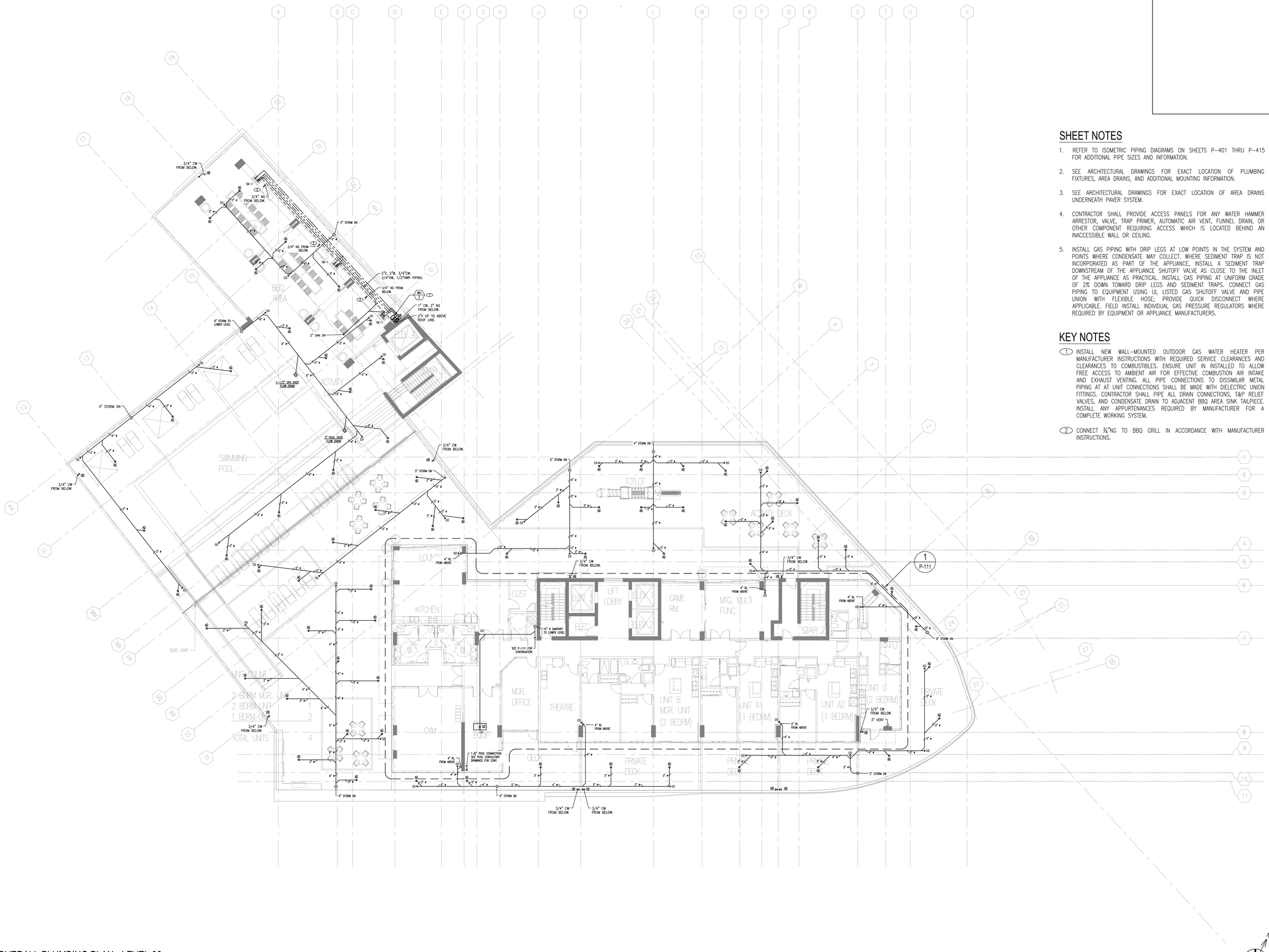

1 OVERALL PLUMBING PLAN - LEVEL 06
SCALE: 3/32" = 1'-0"

SHEET NOTES

1. REFER TO ISOMETRIC PIPING DIAGRAMS ON SHEETS P-401 THRU P-415 FOR ADDITIONAL PIPE SIZES AND INFORMATION.
2. SEE ARCHITECTURAL DRAWINGS FOR EXACT LOCATION OF PLUMBING FIXTURES, AREA DRAINS, AND ADDITIONAL MOUNTING INFORMATION.
3. SEE ARCHITECTURAL DRAWINGS FOR EXACT LOCATION OF AREA DRAINS UNDERNEATH PAVER SYSTEM.
4. CONTRACTOR SHALL PROVIDE ACCESS PANELS FOR ANY WATER HAMMER ARRESTOR, VALVE, TRAP PRIMER, AUTOMATIC AIR VENT, FUNNEL DRAIN, OR OTHER COMPONENT REQUIRING ACCESS WHICH IS LOCATED BEHIND AN INACCESSIBLE WALL OR CEILING.
5. INSTALL GAS PIPING WITH DRIP LEGS AT LOW POINTS IN THE SYSTEM AND POINTS WHERE CONDENSATE MAY COLLECT. WHERE SEDIMENT TRAP IS NOT INCORPORATED AS PART OF THE APPLIANCE, INSTALL A SEDIMENT TRAP DOWNSTREAM OF THE APPLIANCE SHUTOFF VALVE AS CLOSE TO THE INLET OF THE APPLIANCE AS PRACTICAL. INSTALL GAS PIPING AT UNIFORM GRADE OF 2% DOWN TOWARD DRIP LEGS AND SEDIMENT TRAPS. CONNECT GAS PIPING TO EQUIPMENT USING UL LISTED GAS SHUTOFF VALVE AND PIPE UNION WITH FLEXIBLE HOSE; PROVIDE QUICK DISCONNECT WHERE APPLICABLE. FIELD INSTALL INDIVIDUAL GAS PRESSURE REGULATORS WHERE REQUIRED BY EQUIPMENT OR APPLIANCE MANUFACTURERS.

KEY NOTES

1. INSTALL NEW WALL-MOUNTED OUTDOOR GAS WATER HEATER PER MANUFACTURER INSTRUCTIONS WITH REQUIRED SERVICE CLEARANCES AND CLEARANCES TO COMBUSTIBLES. ENSURE UNIT IN INSTALLED TO ALLOW FREE ACCESS TO AMBIENT AIR FOR EFFECTIVE COMBUSTION AIR INTAKE AND EXHAUST VENTING. ALL PIPE CONNECTIONS TO DISSIMILAR METAL PIPING AT AT UNIT CONNECTIONS SHALL BE MADE WITH DIELECTRIC UNION FITTINGS. CONTRACTOR SHALL PIPE ALL DRAIN CONNECTIONS, T&P RELIEF VALVES, AND CONDENSATE DRAIN TO ADJACENT BBQ AREA SINK TAILPIECE. INSTALL ANY APPURTENANCES REQUIRED BY MANUFACTURER FOR A COMPLETE WORKING SYSTEM.
2. CONNECT ¾"NG TO BBQ GRILL IN ACCORDANCE WITH MANUFACTURER INSTRUCTIONS.

CROSSLAND ENGINEERING
Big Firm Results. Small Firm Service.
1511 Lewis Street, Honolulu, HI 96822
(808) 462-8484 • info@crosslandeng.com • www.crosslandeng.com

ENGINEER:
THIS WORK WAS PREPARED BY ME OR UNDER MY SUPERVISION AND CONSTRUCTION OF THIS PROJECT WILL BE UNDER MY OBSERVATION.

ANDREW S. CROSSLAND
LICENSED PROFESSIONAL ENGINEER
No. 16028-M
HAWAII U.S.A.

EXPIRES: 4/30/2020

DEVELOPER:
CALIFORNIA INVESTMENT REGIONAL CENTER, LLC

PROJECT OWNER:
HAWAII CITY PLAZA, LP

Hawaii City Plaza
Honolulu, Hawaii
710 Sheridan Street
TMK 2-3-014: Parcels 002, 004, & 011

PERMIT SET

DATE 2019 MARCH 19

PROJECT # 15028-02

SHEET TITLE
OVERALL PLUMBING PLAN - LEVEL 06

SHEET NO.
P-106

SHEET NOTES

1. REFER TO ISOMETRIC PIPING DIAGRAMS ON SHEETS P-401 THRU P-415 FOR ADDITIONAL PIPE SIZES AND INFORMATION.
2. SEE ARCHITECTURAL DRAWINGS FOR EXACT LOCATION OF PLUMBING FIXTURES AND ADDITIONAL MOUNTING INFORMATION.
3. CONTRACTOR SHALL PROVIDE ACCESS PANELS FOR ANY WATER HAMMER ARRESTOR, VALVE, TRAP PRIMER, AUTOMATIC AIR VENT, FUNNEL DRAIN, OR OTHER COMPONENT REQUIRING ACCESS WHICH IS LOCATED BEHIND AN INACCESSIBLE WALL OR CEILING.
4. COORDINATE WITH OTHER TRADES FOR ALL PIPING LOCATED WITHIN CABINETRY.
5. INSTALL GAS PIPING WITH DRIP LEGS AT LOW POINTS IN THE SYSTEM AND POINTS WHERE CONDENSATE MAY COLLECT. WHERE SEDIMENT TRAP IS NOT INCORPORATED AS PART OF THE APPLIANCE, INSTALL A SEDIMENT TRAP DOWNSTREAM OF THE APPLIANCE SHUTOFF VALVE AS CLOSE TO THE INLET OF THE APPLIANCE AS PRACTICAL. INSTALL GAS PIPING AT UNIFORM GRADE OF 2% DOWN TOWARD DRIP LEGS AND SEDIMENT TRAPS. CONNECT GAS PIPING TO APPLIANCE USING UL LISTED GAS SHUTOFF VALVE AND PIPE UNION WITH FLEXIBLE HOSE AND RESTRAINING CABLE; PROVIDE QUICK DISCONNECT WHERE APPLICABLE. FIELD INSTALL INDIVIDUAL GAS PRESSURE REGULATORS WHERE REQUIRED BY APPLIANCE MANUFACTURERS.

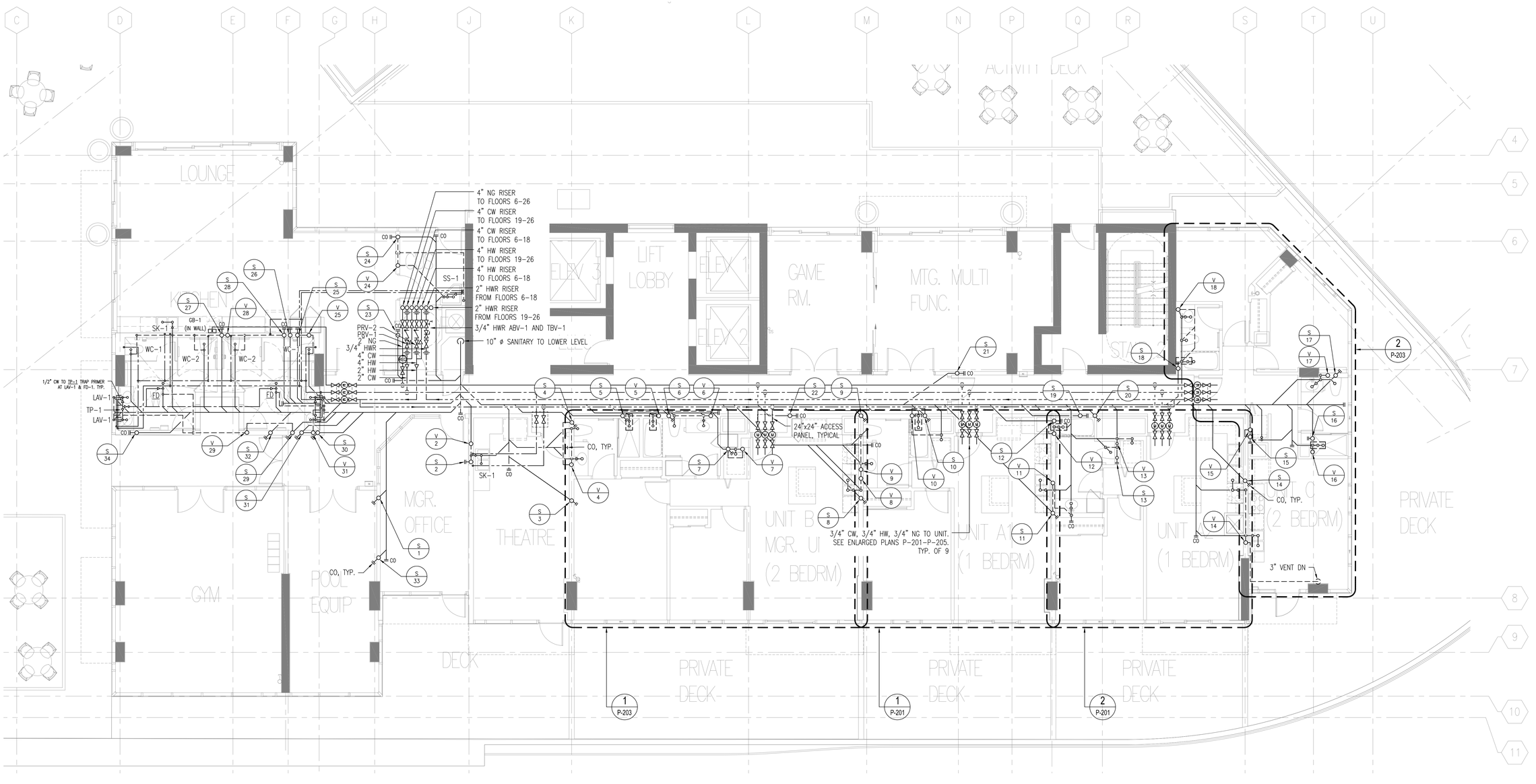

1 TOWER PLUMBING PLAN - LEVEL 06
SCALE: 3/16" = 1'-0"

4 2 0 4 8

CROSSLAND ENGINEERING
Big Firm Results. Small Firm Service.

ENGINEER:
THIS WORK WAS PREPARED BY ME OR UNDER MY SUPERVISION AND CONSTRUCTION OF THIS PROJECT WILL BE UNDER MY OBSERVATION.

ANDREW S. CROSSLAND
LICENSED PROFESSIONAL ENGINEER
No. 16028-M
HAWAII U.S.A.

EXPIRES: 4/30/2020

DEVELOPER:
CALIFORNIA INVESTMENT REGIONAL CENTER, LLC

PROJECT OWNER:
HAWAII CITY PLAZA, LP

Hawaii City Plaza
Honolulu, Hawaii
710 Sheridan Street
TMK 2-3-014: Parcels 002, 004, & 011

PERMIT SET

DATE 2019 MARCH 19

PROJECT # 15028-02

SHEET TITLE
TOWER PLUMBING PLAN - LEVEL 06

SHEET NO.
P-111

SHEET NOTES

1. REFER TO ISOMETRIC PIPING DIAGRAMS ON SHEETS P-401 THRU P-415 FOR ADDITIONAL PIPE SIZES AND INFORMATION.
2. SEE ARCHITECTURAL DRAWINGS FOR EXACT LOCATION OF PLUMBING FIXTURES AND ADDITIONAL MOUNTING INFORMATION.
3. CONTRACTOR SHALL PROVIDE ACCESS PANELS FOR ANY WATER HAMMER ARRESTOR, VALVE, TRAP PRIMER, AUTOMATIC AIR VENT, FUNNEL DRAIN, OR OTHER COMPONENT REQUIRING ACCESS WHICH IS LOCATED BEHIND AN INACCESSIBLE WALL OR CEILING.
4. INSTALL GAS PIPING WITH DRIP LEGS AT LOW POINTS IN THE SYSTEM AND POINTS WHERE CONDENSATE MAY COLLECT. WHERE SEDIMENT TRAP IS NOT INCORPORATED AS PART OF THE APPLIANCE, INSTALL A SEDIMENT TRAP DOWNSTREAM OF THE APPLIANCE SHUTOFF VALVE AS CLOSE TO THE INLET OF THE APPLIANCE AS PRACTICAL. INSTALL GAS PIPING AT UNIFORM GRADE OF 2% DOWN TOWARD DRIP LEGS AND SEDIMENT TRAPS. CONNECT GAS PIPING TO APPLIANCE USING UL LISTED GAS SHUTOFF VALVE AND PIPE UNION WITH FLEXIBLE HOSE AND RESTRAINING CABLE; PROVIDE QUICK DISCONNECT WHERE APPLICABLE. FIELD INSTALL INDIVIDUAL GAS PRESSURE REGULATORS WHERE REQUIRED BY APPLIANCE MANUFACTURERS.

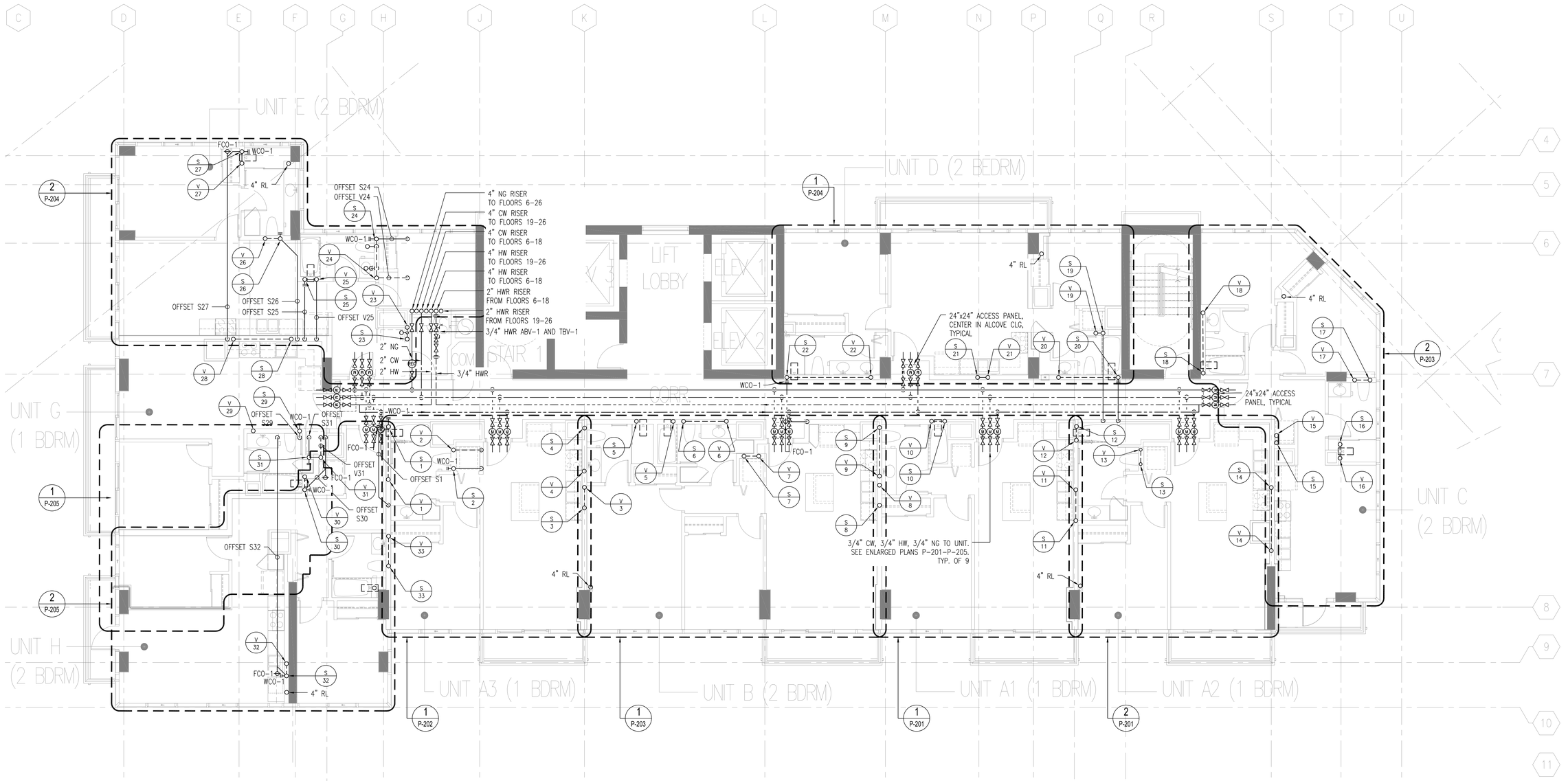

1 TOWER PLUMBING PLAN - LEVEL 07
SCALE: 3/16" = 1'-0"

4 2 0 4 8

CROSSLAND ENGINEERING
Big Firm Results. Small Firm Service.

ENGINEER:
THIS WORK WAS PREPARED BY ME OR UNDER MY SUPERVISION AND CONSTRUCTION OF THIS PROJECT WILL BE UNDER MY OBSERVATION.

ANDREW S. CROSSLAND
LICENSED PROFESSIONAL ENGINEER
No. 16028-M
HAWAII U.S.A.

EXPIRES: 4/30/2020

DEVELOPER:
CALIFORNIA INVESTMENT REGIONAL CENTER, LLC

PROJECT OWNER:
HAWAII CITY PLAZA, LP

Hawaii City Plaza
Honolulu, Hawaii
710 Sheridan Street
TMK 2-3-014: Parcels 002, 004, & 011

PERMIT SET

DATE 2019 MARCH 19

PROJECT # 15028-02

SHEET TITLE
TOWER PLUMBING PLAN - LEVEL 07

SHEET NO.
P-112

SHEET NOTES

1. REFER TO ISOMETRIC PIPING DIAGRAMS ON SHEETS P-401 THRU P-415 FOR ADDITIONAL PIPE SIZES AND INFORMATION.
2. SEE ARCHITECTURAL DRAWINGS FOR EXACT LOCATION OF PLUMBING FIXTURES AND ADDITIONAL MOUNTING INFORMATION.
3. CONTRACTOR SHALL PROVIDE ACCESS PANELS FOR ANY WATER HAMMER ARRESTOR, VALVE, TRAP PRIMER, AUTOMATIC AIR VENT, FUNNEL DRAIN, OR OTHER COMPONENT REQUIRING ACCESS WHICH IS LOCATED BEHIND AN INACCESSIBLE WALL OR CEILING.
4. INSTALL GAS PIPING WITH DRIP LEGS AT LOW POINTS IN THE SYSTEM AND POINTS WHERE CONDENSATE MAY COLLECT. WHERE SEDIMENT TRAP IS NOT INCORPORATED AS PART OF THE APPLIANCE, INSTALL A SEDIMENT TRAP DOWNSTREAM OF THE APPLIANCE SHUTOFF VALVE AS CLOSE TO THE INLET OF THE APPLIANCE AS PRACTICAL. INSTALL GAS PIPING AT UNIFORM GRADE OF 2% DOWN TOWARD DRIP LEGS AND SEDIMENT TRAPS. CONNECT GAS PIPING TO APPLIANCE USING UL LISTED GAS SHUTOFF VALVE AND PIPE UNION WITH FLEXIBLE HOSE AND RESTRAINING CABLE; PROVIDE QUICK DISCONNECT WHERE APPLICABLE. FIELD INSTALL INDIVIDUAL GAS PRESSURE REGULATORS WHERE REQUIRED BY APPLIANCE MANUFACTURERS.

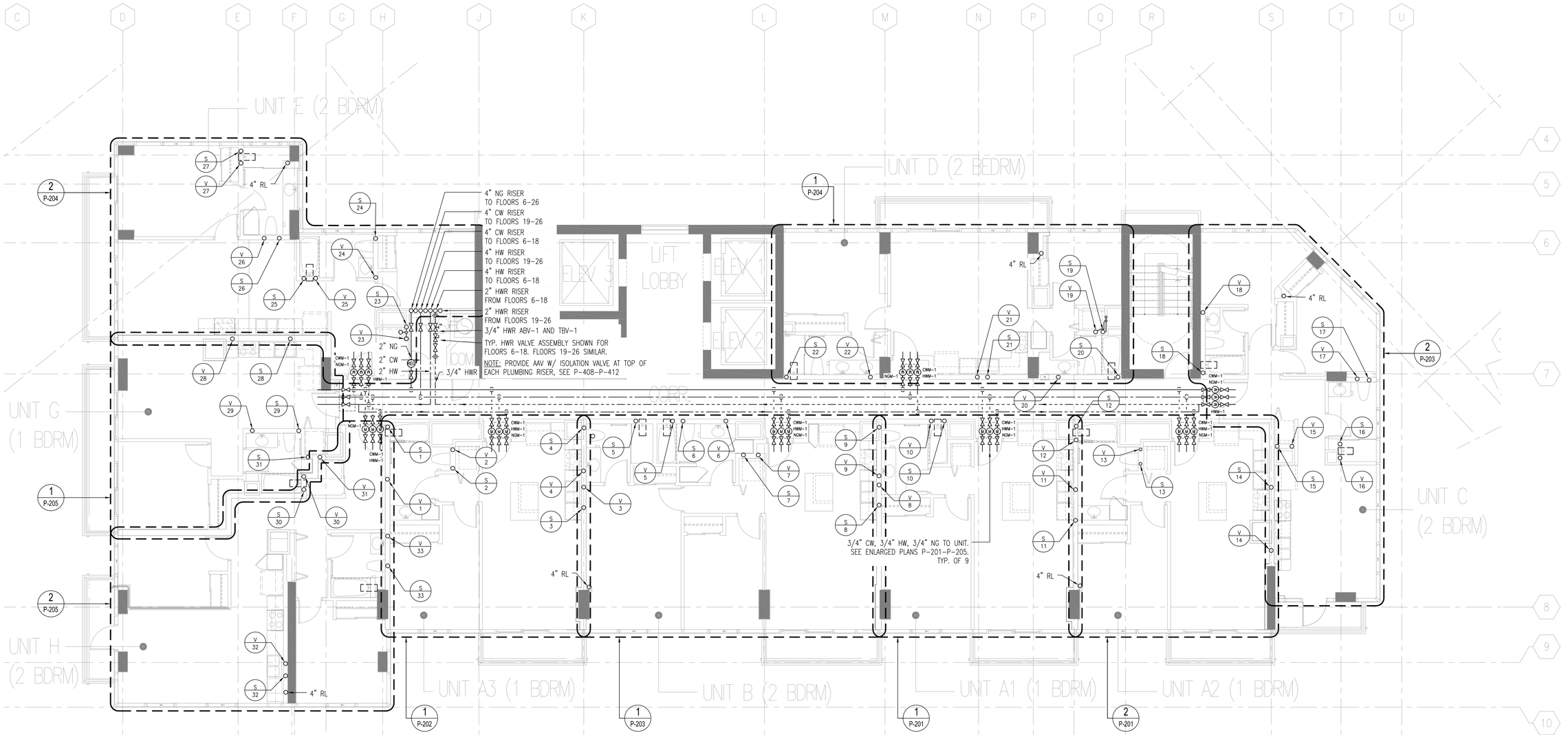

1 TOWER PLUMBING PLAN - LEVEL 08-26
SCALE: 3/16" = 1'-0"

4 2 0 4 8

CROSSLAND ENGINEERING
Big Firm Results. Small Firm Service.

ENGINEER:

THIS WORK WAS PREPARED BY ME OR UNDER MY SUPERVISION AND CONSTRUCTION OF THIS PROJECT WILL BE UNDER MY OBSERVATION.

ANDREW S. CROSSLAND
LICENSED PROFESSIONAL ENGINEER
No. 16028-M
HAWAII U.S.A.

EXPIRES: 4/30/2020

DEVELOPER:
CALIFORNIA INVESTMENT REGIONAL CENTER, LLC

PROJECT OWNER:
HAWAII CITY PLAZA, LP

Hawaii City Plaza
Honolulu, Hawaii
710 Sheridan Street
TMK 2-3-014: Parcels 002, 004, & 011

PERMIT SET

DATE 2019 MARCH 19

PROJECT # 15028-02

SHEET TITLE
TOWER PLUMBING PLAN - LEVEL 08-26

SHEET NO.
P-113

SHEET NOTES

1. REFER TO ISOMETRIC PIPING DIAGRAMS ON SHEETS P-401 THRU P-415 FOR ADDITIONAL PIPE SIZES AND INFORMATION.
2. SEE ARCHITECTURAL DRAWINGS FOR EXACT LOCATION OF ROOF DRAINS AND OVERFLOW SCUPPER DETAILS.

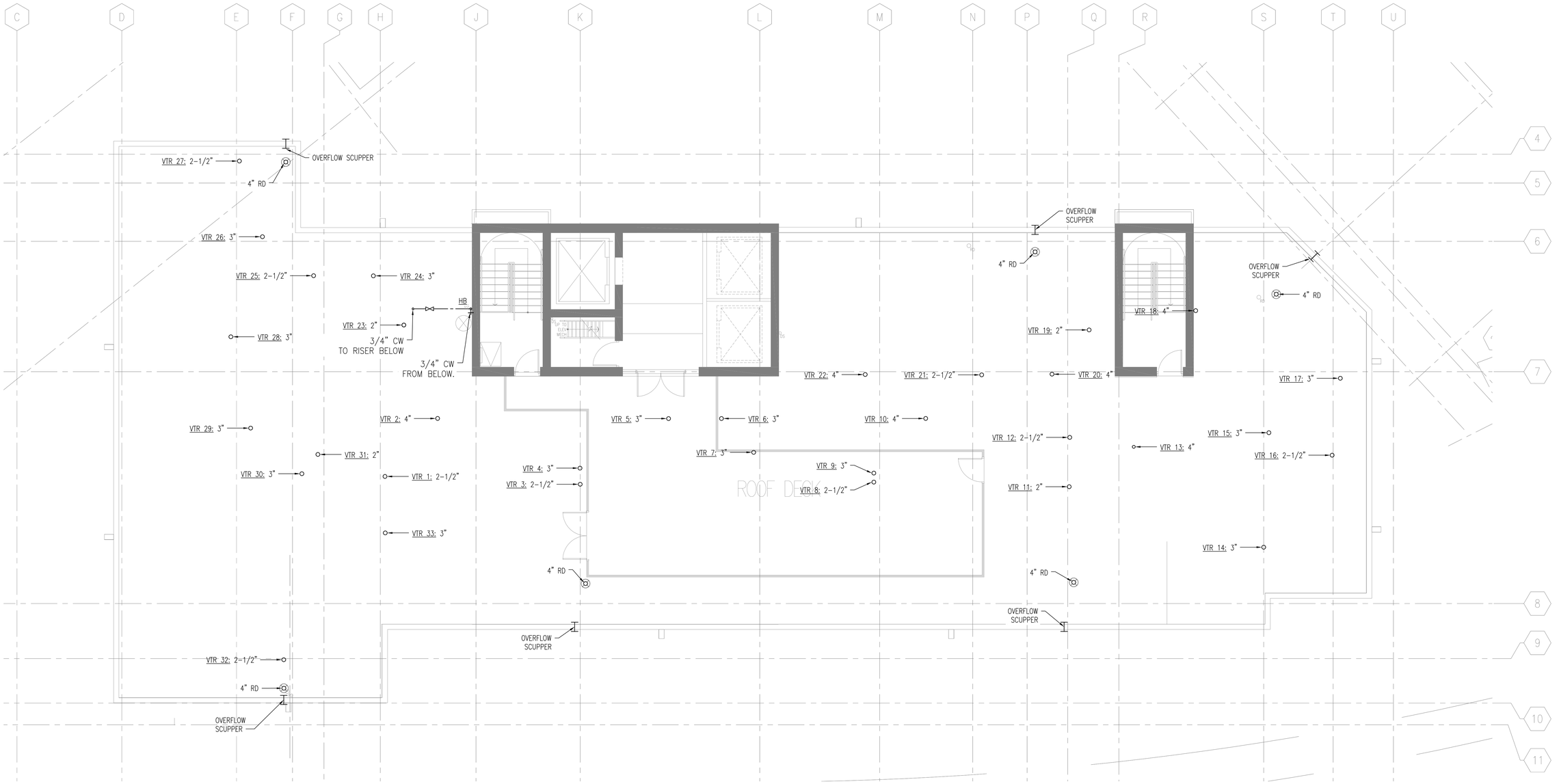

1 TOWER PLUMBING PLAN - ROOF DECK
SCALE: 3/16" = 1'-0"

4 2 0 4 8

CROSSLAND ENGINEERING
Big Firm Results. Small Firm Service.

ENGINEER:
THIS WORK WAS PREPARED BY ME OR UNDER MY SUPERVISION AND CONSTRUCTION OF THIS PROJECT WILL BE UNDER MY OBSERVATION.

ANDREW S. CROSSLAND
LICENSED PROFESSIONAL ENGINEER
No. 16028-M
HAWAII U.S.A.

EXPIRES: 4/30/2020

DEVELOPER:
CALIFORNIA INVESTMENT REGIONAL CENTER, LLC

PROJECT OWNER:
HAWAII CITY PLAZA, LP

Hawaii City Plaza
Honolulu, Hawaii
710 Sheridan Street
TMK 2-3-014: Parcels 002, 004, & 011

PERMIT SET

DATE 2019 MARCH 19

PROJECT # 15028-02

SHEET TITLE
TOWER PLUMBING PLAN - ROOF DECK

SHEET NO.
P-114

SHEET NOTES

1. REFER TO ISOMETRIC PIPING DIAGRAMS ON SHEETS P-401 THRU P-415 FOR ADDITIONAL PIPE SIZES AND INFORMATION.
2. SEE ARCHITECTURAL DRAWINGS FOR EXACT LOCATION OF PLUMBING FIXTURES AND ADDITIONAL MOUNTING INFORMATION.
3. CONTRACTOR SHALL PROVIDE ACCESS PANELS FOR ANY WATER HAMMER ARRESTOR, VALVE, TRAP PRIMER, AUTOMATIC AIR VENT, FUNNEL DRAIN, OR OTHER COMPONENT REQUIRING ACCESS WHICH IS LOCATED BEHIND AN INACCESSIBLE WALL OR CEILING.
4. COORDINATE WITH OTHER TRADES FOR ALL PIPING LOCATED WITHIN CABINETRY.
5. INSTALL GAS PIPING WITH DRIP LEGS AT LOW POINTS IN THE SYSTEM AND POINTS WHERE CONDENSATE MAY COLLECT. WHERE SEDIMENT TRAP IS NOT INCORPORATED AS PART OF THE APPLIANCE, INSTALL A SEDIMENT TRAP DOWNSTREAM OF THE APPLIANCE SHUTOFF VALVE AS CLOSE TO THE INLET OF THE APPLIANCE AS PRACTICAL. INSTALL GAS PIPING AT UNIFORM GRADE OF 2% DOWN TOWARD DRIP LEGS AND SEDIMENT TRAPS. CONNECT GAS PIPING TO APPLIANCE USING UL LISTED GAS SHUTOFF VALVE AND PIPE UNION WITH FLEXIBLE HOSE AND RESTRAINING CABLE; PROVIDE QUICK DISCONNECT WHERE APPLICABLE. FIELD INSTALL INDIVIDUAL GAS PRESSURE REGULATORS WHERE REQUIRED BY APPLIANCE MANUFACTURERS.

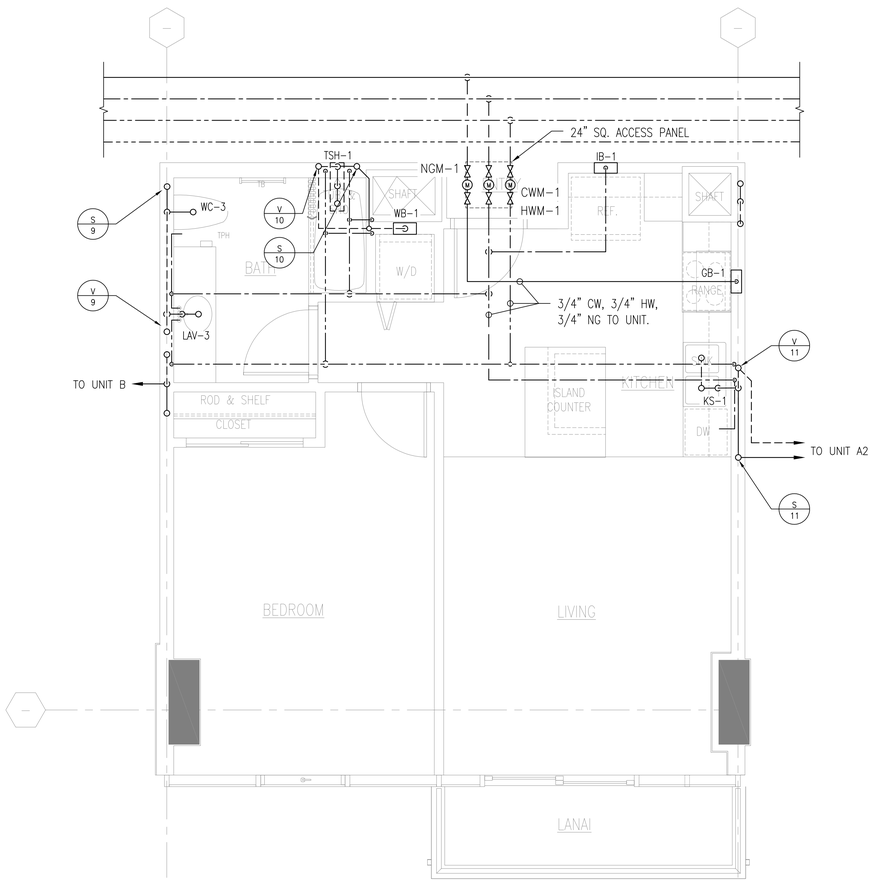

1 PLUMBING PLAN - UNIT A1
SCALE: 3/8" = 1'-0"

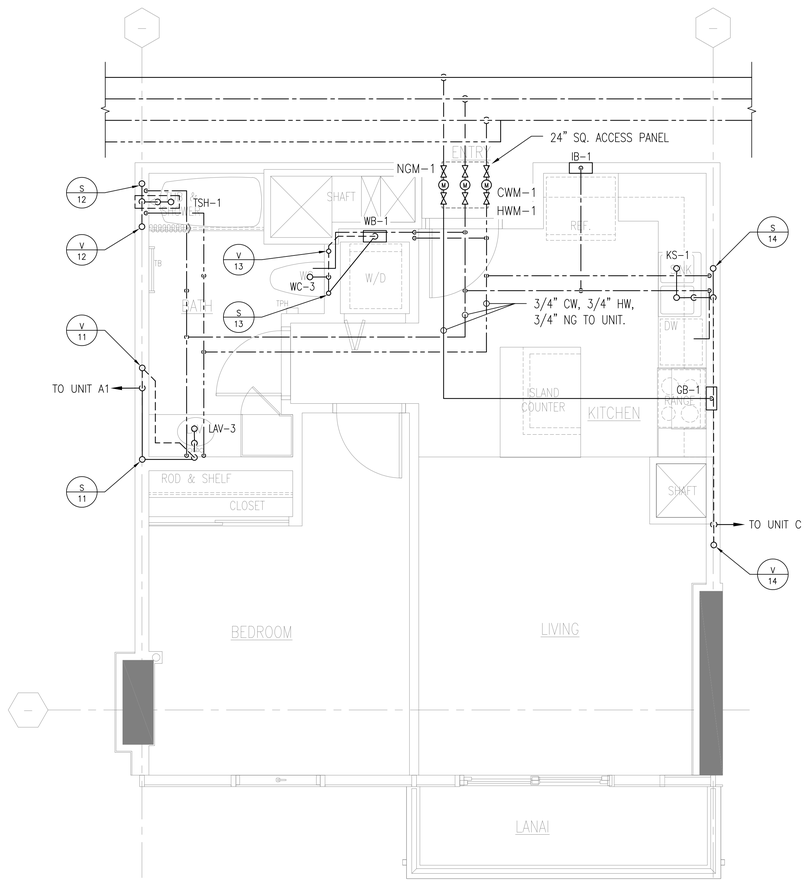

2 PLUMBING PLAN - UNIT A2
SCALE: 3/8" = 1'-0"

CROSSLAND ENGINEERING
Big Firm Results. Small Firm Service.

ENGINEER:
THIS WORK WAS PREPARED BY ME OR UNDER MY SUPERVISION AND CONSTRUCTION OF THIS PROJECT WILL BE UNDER MY OBSERVATION.

ANDREW S. CROSSLAND
LICENSED PROFESSIONAL ENGINEER
No. 16028-M
HAWAII U.S.A.

EXPIRES: 4/30/2020

DEVELOPER:
CALIFORNIA INVESTMENT REGIONAL CENTER, LLC

PROJECT OWNER:
HAWAII CITY PLAZA, LP

Hawaii City Plaza
Honolulu, Hawaii
710 Sheridan Street
TMK 2-3-014: Parcels 002, 004, & 011

PERMIT SET

DATE 2019 MARCH 19

PROJECT # 15028-02

SHEET TITLE
ENLARGED PLUMBING PLAN - UNIT TYPES A1 & A2

SHEET NO.
P-201

SHEET NOTES

1. REFER TO ISOMETRIC PIPING DIAGRAMS ON SHEETS P-401 THRU P-415 FOR ADDITIONAL PIPE SIZES AND INFORMATION.
2. SEE ARCHITECTURAL DRAWINGS FOR EXACT LOCATION OF PLUMBING FIXTURES AND ADDITIONAL MOUNTING INFORMATION.
3. CONTRACTOR SHALL PROVIDE ACCESS PANELS FOR ANY WATER HAMMER ARRESTOR, VALVE, TRAP PRIMER, AUTOMATIC AIR VENT, FUNNEL DRAIN, OR OTHER COMPONENT REQUIRING ACCESS WHICH IS LOCATED BEHIND AN INACCESSIBLE WALL OR CEILING.
4. COORDINATE WITH OTHER TRADES FOR ALL PIPING LOCATED WITHIN CABINETRY.
5. INSTALL GAS PIPING WITH DRIP LEGS AT LOW POINTS IN THE SYSTEM AND POINTS WHERE CONDENSATE MAY COLLECT. WHERE SEDIMENT TRAP IS NOT INCORPORATED AS PART OF THE APPLIANCE, INSTALL A SEDIMENT TRAP DOWNSTREAM OF THE APPLIANCE SHUTOFF VALVE AS CLOSE TO THE INLET OF THE APPLIANCE AS PRACTICAL. INSTALL GAS PIPING AT UNIFORM GRADE OF 2% DOWN TOWARD DRIP LEGS AND SEDIMENT TRAPS. CONNECT GAS PIPING TO APPLIANCE USING UL LISTED GAS SHUTOFF VALVE AND PIPE UNION WITH FLEXIBLE HOSE AND RESTRAINING CABLE; PROVIDE QUICK DISCONNECT WHERE APPLICABLE. FIELD INSTALL INDIVIDUAL GAS PRESSURE REGULATORS WHERE REQUIRED BY APPLIANCE MANUFACTURERS.

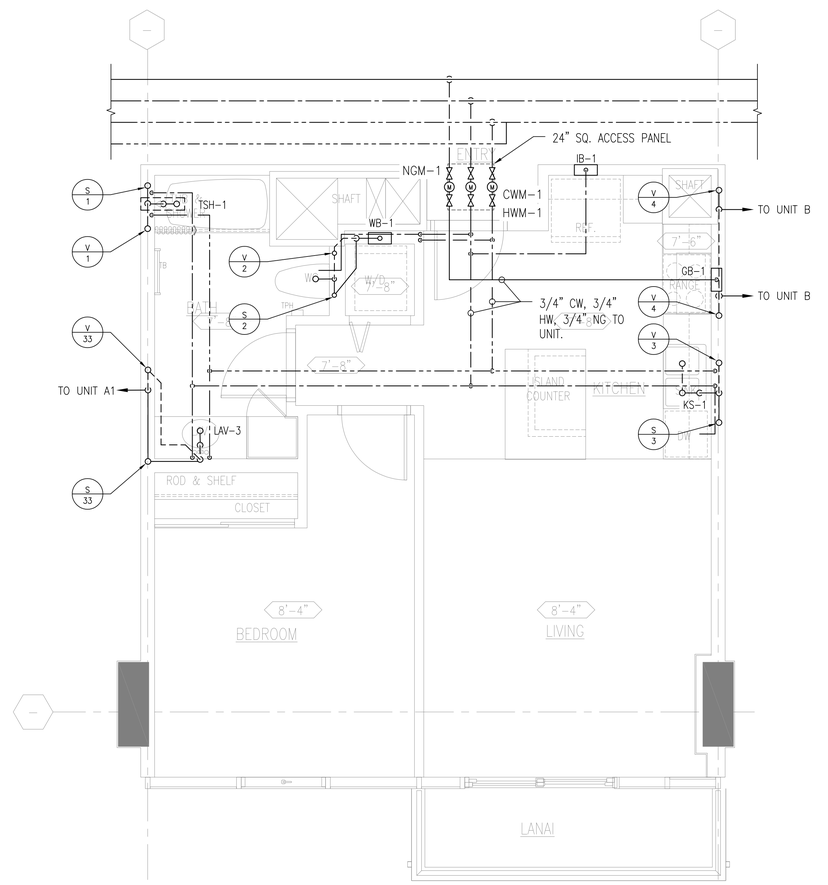

1 PLUMBING PLAN - UNIT A3
SCALE: 3/8" = 1'-0"

2 1 0 2 4

CROSSLAND ENGINEERING
Big Firm Results. Small Firm Service.

ENGINEER:
THIS WORK WAS PREPARED BY ME OR UNDER MY SUPERVISION AND CONSTRUCTION OF THIS PROJECT WILL BE UNDER MY OBSERVATION.

ANDREW S. CROSSLAND
LICENSED PROFESSIONAL ENGINEER
No. 16028-M
HAWAII U.S.A.

EXPIRES: 4/30/2020

DEVELOPER:
CALIFORNIA INVESTMENT REGIONAL CENTER, LLC

PROJECT OWNER:
HAWAII CITY PLAZA, LP

Hawaii City Plaza
Honolulu, Hawaii
710 Sheridan Street
TMK 2-3-014: Parcels 002, 004, & 011

PERMIT SET

DATE 2019 MARCH 19

PROJECT # 15028-02

SHEET TITLE
ENLARGED PLUMBING PLAN - UNIT TYPES A3

SHEET NO.
P-202

SHEET NOTES

1. REFER TO ISOMETRIC PIPING DIAGRAMS ON SHEETS P-401 THRU P-415 FOR ADDITIONAL PIPE SIZES AND INFORMATION.
2. SEE ARCHITECTURAL DRAWINGS FOR EXACT LOCATION OF PLUMBING FIXTURES AND ADDITIONAL MOUNTING INFORMATION.
3. CONTRACTOR SHALL PROVIDE ACCESS PANELS FOR ANY WATER HAMMER ARRESTOR, VALVE, TRAP PRIMER, AUTOMATIC AIR VENT, FUNNEL DRAIN, OR OTHER COMPONENT REQUIRING ACCESS WHICH IS LOCATED BEHIND AN INACCESSIBLE WALL OR CEILING.
4. COORDINATE WITH OTHER TRADES FOR ALL PIPING LOCATED WITHIN CABINETRY.
5. INSTALL GAS PIPING WITH DRIP LEGS AT LOW POINTS IN THE SYSTEM AND POINTS WHERE CONDENSATE MAY COLLECT. WHERE SEDIMENT TRAP IS NOT INCORPORATED AS PART OF THE APPLIANCE, INSTALL A SEDIMENT TRAP DOWNSTREAM OF THE APPLIANCE SHUTOFF VALVE AS CLOSE TO THE INLET OF THE APPLIANCE AS PRACTICAL. INSTALL GAS PIPING AT UNIFORM GRADE OF 2% DOWN TOWARD DRIP LEGS AND SEDIMENT TRAPS. CONNECT GAS PIPING TO APPLIANCE USING UL LISTED GAS SHUTOFF VALVE AND PIPE UNION WITH FLEXIBLE HOSE AND RESTRAINING CABLE; PROVIDE QUICK DISCONNECT WHERE APPLICABLE. FIELD INSTALL INDIVIDUAL GAS PRESSURE REGULATORS WHERE REQUIRED BY APPLIANCE MANUFACTURERS.

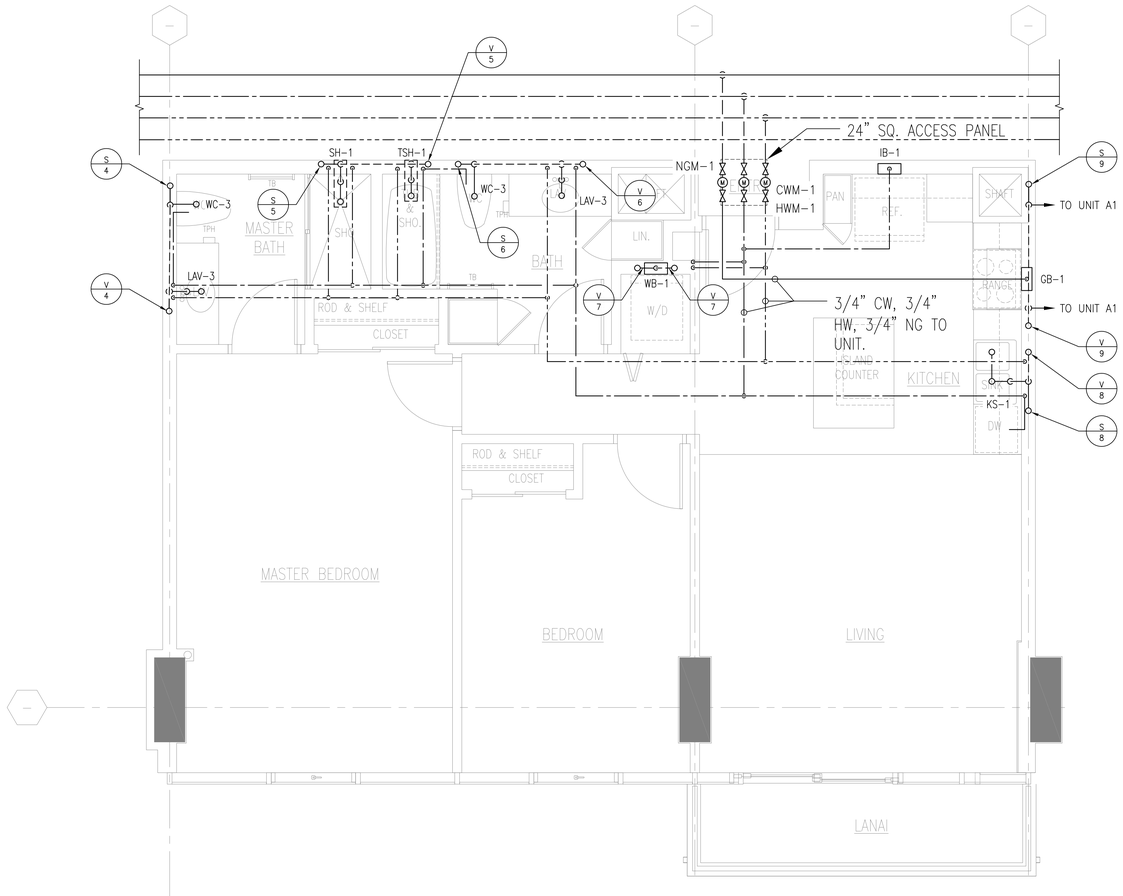

1 PLUMBING PLAN - UNIT B
SCALE: 3/8" = 1'-0"

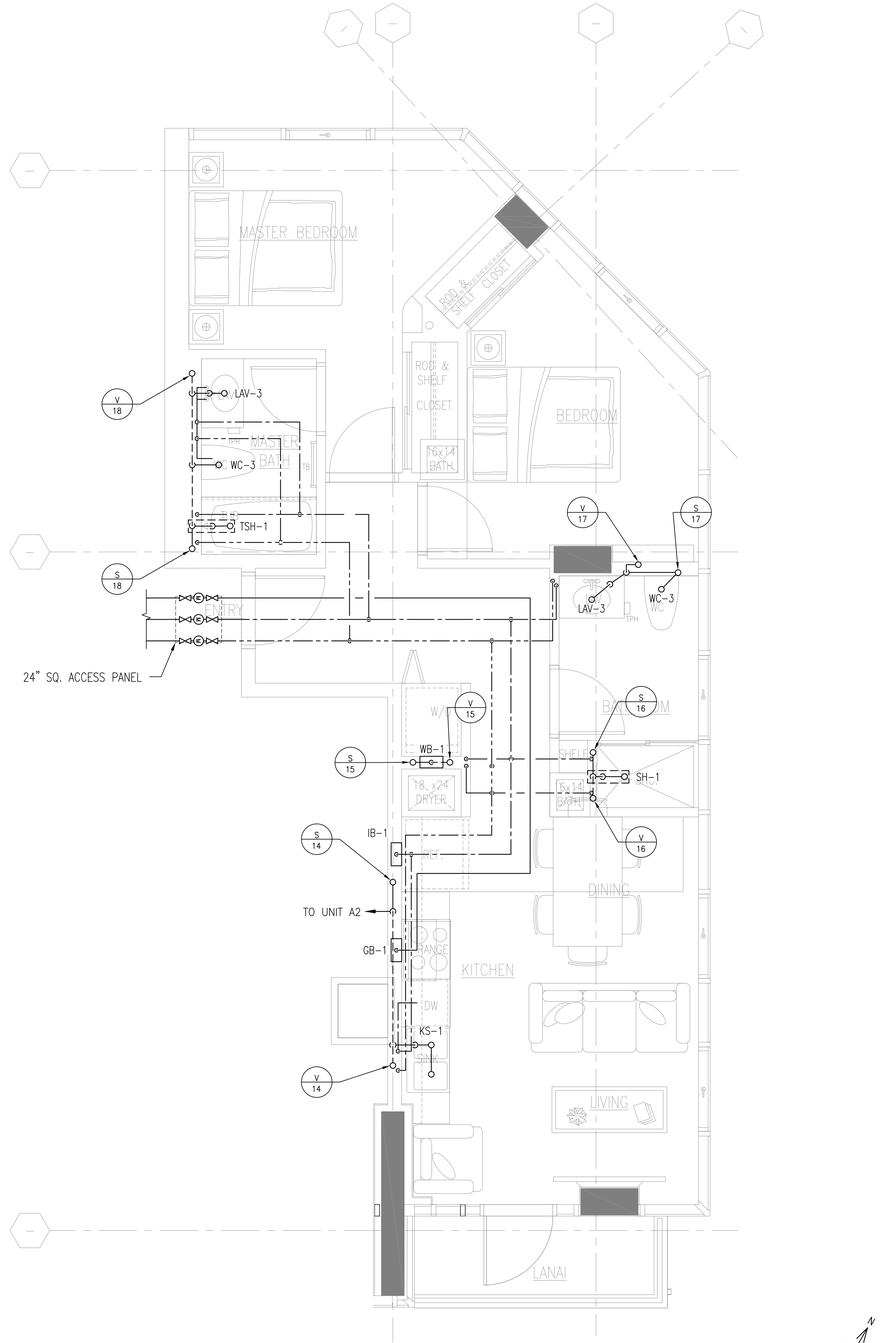

2 PLUMBING PLAN - UNIT C
SCALE: 3/8" = 1'-0"

CROSSLAND ENGINEERING
Big Firm Results. Small Firm Service.

ENGINEER:
THIS WORK WAS PREPARED BY ME OR UNDER MY SUPERVISION AND CONSTRUCTION OF THIS PROJECT WILL BE UNDER MY OBSERVATION.

ANDREW S. CROSSLAND
LICENSED PROFESSIONAL ENGINEER
No. 16028-M
HAWAII U.S.A.

EXPIRES: 4/30/2020

DEVELOPER:
CALIFORNIA INVESTMENT REGIONAL CENTER, LLC

PROJECT OWNER:
HAWAII CITY PLAZA, LP

Hawaii City Plaza
Honolulu, Hawaii
710 Sheridan Street
TMK 2-3-014: Parcels 002, 004, & 011

PERMIT SET

DATE 2019 MARCH 19

PROJECT # 15028-02

SHEET TITLE
ENLARGED PLUMBING PLAN - UNIT TYPES B & C

SHEET NO.
P-203

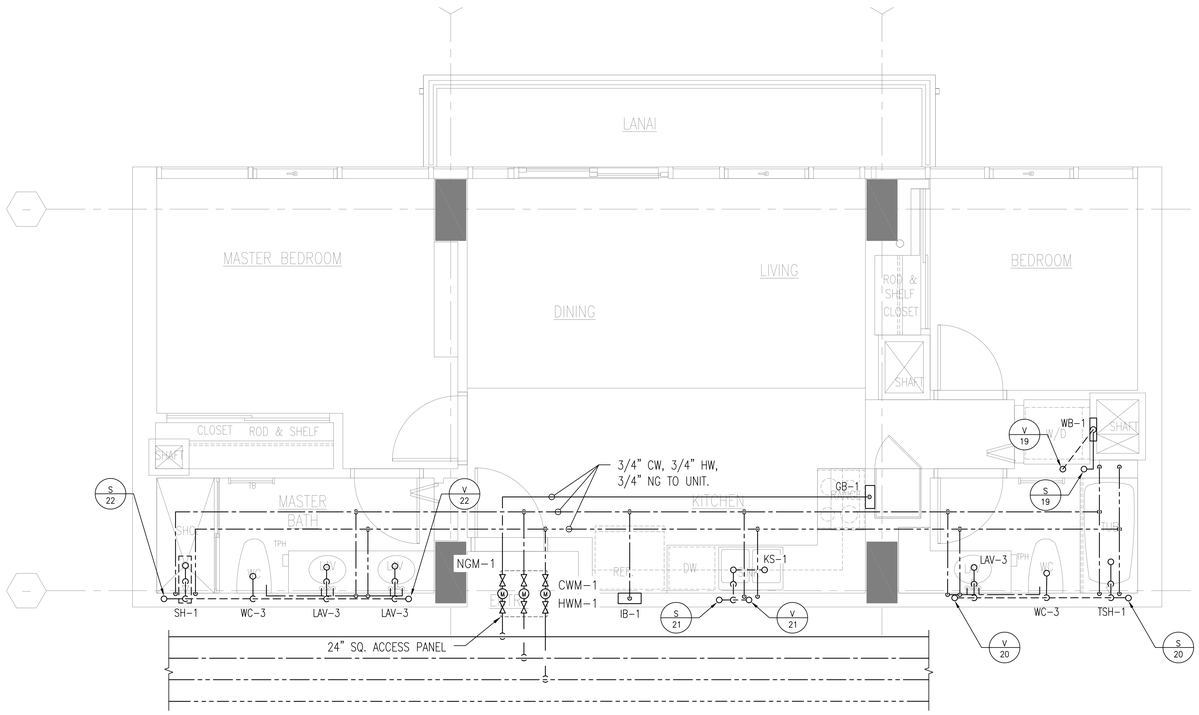

1 PLUMBING PLAN - UNIT D

SCALE: 3/8" = 1'-0"

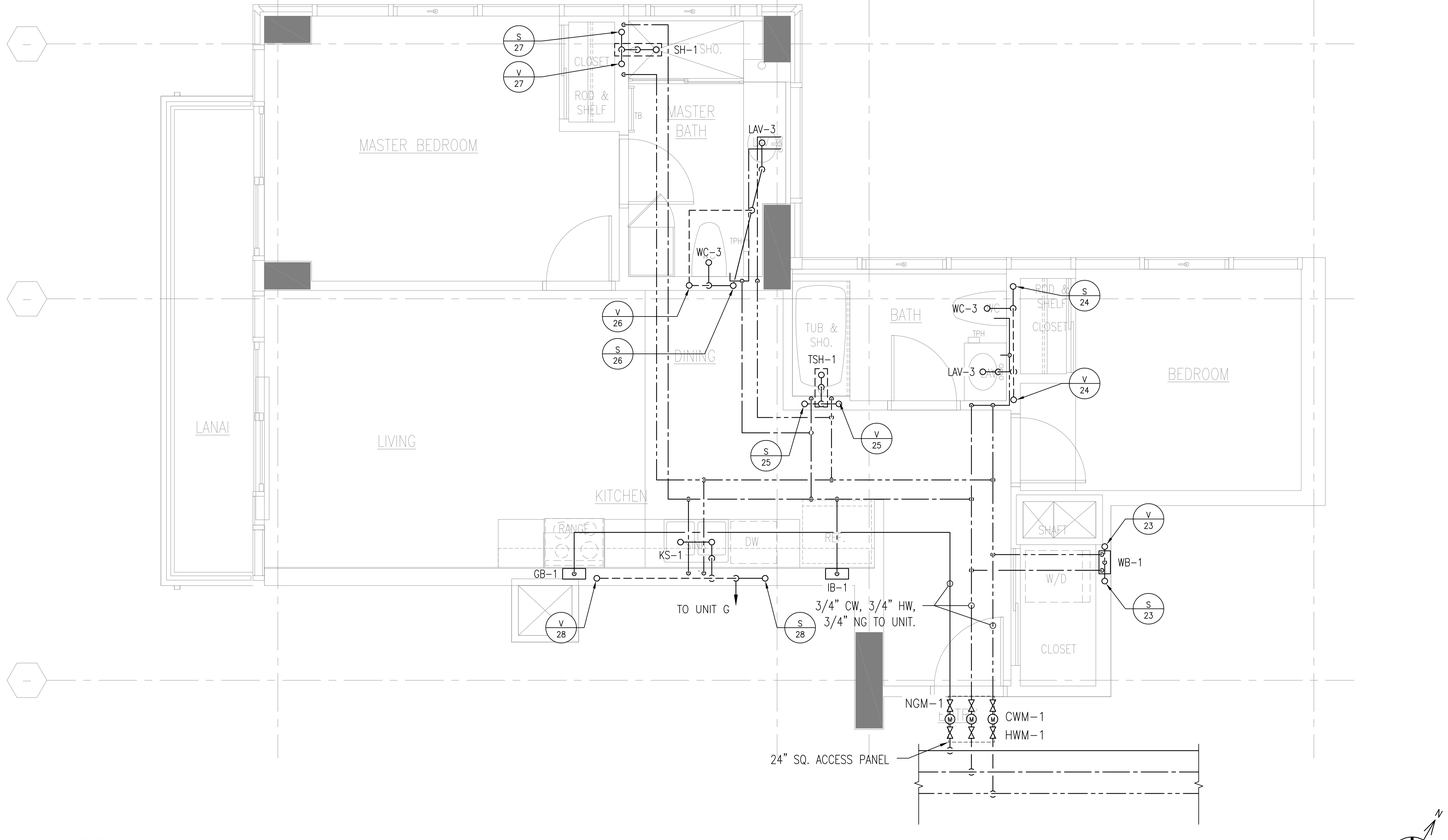

2 PLUMBING PLAN - UNIT E

SCALE: 3/8" = 1'-0"

SHEET NOTES

1. REFER TO ISOMETRIC PIPING DIAGRAMS ON SHEETS P-401 THRU P-415 FOR ADDITIONAL PIPE SIZES AND INFORMATION.
2. SEE ARCHITECTURAL DRAWINGS FOR EXACT LOCATION OF PLUMBING FIXTURES AND ADDITIONAL MOUNTING INFORMATION.
3. CONTRACTOR SHALL PROVIDE ACCESS PANELS FOR ANY WATER HAMMER ARRESTOR, VALVE, TRAP PRIMER, AUTOMATIC AIR VENT, FUNNEL DRAIN, OR OTHER COMPONENT REQUIRING ACCESS WHICH IS LOCATED BEHIND AN INACCESSIBLE WALL OR CEILING.
4. COORDINATE WITH OTHER TRADES FOR ALL PIPING LOCATED WITHIN CABINETRY.
5. INSTALL GAS PIPING WITH DRIP LEGS AT LOW POINTS IN THE SYSTEM AND POINTS WHERE CONDENSATE MAY COLLECT. WHERE SEDIMENT TRAP IS NOT INCORPORATED AS PART OF THE APPLIANCE, INSTALL A SEDIMENT TRAP DOWNSTREAM OF THE APPLIANCE SHUTOFF VALVE AS CLOSE TO THE INLET OF THE APPLIANCE AS PRACTICAL. INSTALL GAS PIPING AT UNIFORM GRADE OF 2% DOWN TOWARD DRIP LEGS AND SEDIMENT TRAPS. CONNECT GAS PIPING TO APPLIANCE USING UL LISTED GAS SHUTOFF VALVE AND PIPE UNION WITH FLEXIBLE HOSE AND RESTRAINING CABLE; PROVIDE QUICK DISCONNECT WHERE APPLICABLE. FIELD INSTALL INDIVIDUAL GAS PRESSURE REGULATORS WHERE REQUIRED BY APPLIANCE MANUFACTURERS.

CROSSLAND ENGINEERING
Big Firm Results. Small Firm Service.
ENGINEER:
THIS WORK WAS PREPARED BY ME OR UNDER MY SUPERVISION AND CONSTRUCTION OF THIS PROJECT WILL BE UNDER MY OBSERVATION.
ANDREW S. CROSSLAND
LICENSED PROFESSIONAL ENGINEER
No. 16028-M
HAWAII U.S.A.
EXPIRES: 4/30/2020

DEVELOPER:
CALIFORNIA INVESTMENT REGIONAL CENTER, LLC

PROJECT OWNER:
HAWAII CITY PLAZA, LP

Hawaii City Plaza
Honolulu, Hawaii
710 Sheridan Street
TMK 2-3-014: Parcels 002, 004, & 011

PERMIT SET

DATE 2019 MARCH 19

PROJECT # 15028-02

SHEET TITLE
ENLARGED PLUMBING PLAN - UNIT TYPES D & E

SHEET NO.
P-204

SHEET NOTES

1. REFER TO ISOMETRIC PIPING DIAGRAMS ON SHEETS P-401 THRU P-415 FOR ADDITIONAL PIPE SIZES AND INFORMATION.
2. SEE ARCHITECTURAL DRAWINGS FOR EXACT LOCATION OF PLUMBING FIXTURES AND ADDITIONAL MOUNTING INFORMATION.
3. CONTRACTOR SHALL PROVIDE ACCESS PANELS FOR ANY WATER HAMMER ARRESTOR, VALVE, TRAP PRIMER, AUTOMATIC AIR VENT, FUNNEL DRAIN, OR OTHER COMPONENT REQUIRING ACCESS WHICH IS LOCATED BEHIND AN INACCESSIBLE WALL OR CEILING.
4. COORDINATE WITH OTHER TRADES FOR ALL PIPING LOCATED WITHIN CABINETRY.
5. INSTALL GAS PIPING WITH DRIP LEGS AT LOW POINTS IN THE SYSTEM AND POINTS WHERE CONDENSATE MAY COLLECT. WHERE SEDIMENT TRAP IS NOT INCORPORATED AS PART OF THE APPLIANCE, INSTALL A SEDIMENT TRAP DOWNSTREAM OF THE APPLIANCE SHUTOFF VALVE AS CLOSE TO THE INLET OF THE APPLIANCE AS PRACTICAL. INSTALL GAS PIPING AT UNIFORM GRADE OF 2% DOWN TOWARD DRIP LEGS AND SEDIMENT TRAPS. CONNECT GAS PIPING TO APPLIANCE USING UL LISTED GAS SHUTOFF VALVE AND PIPE UNION WITH FLEXIBLE HOSE AND RESTRAINING CABLE; PROVIDE QUICK DISCONNECT WHERE APPLICABLE. FIELD INSTALL INDIVIDUAL GAS PRESSURE REGULATORS WHERE REQUIRED BY APPLIANCE MANUFACTURERS.

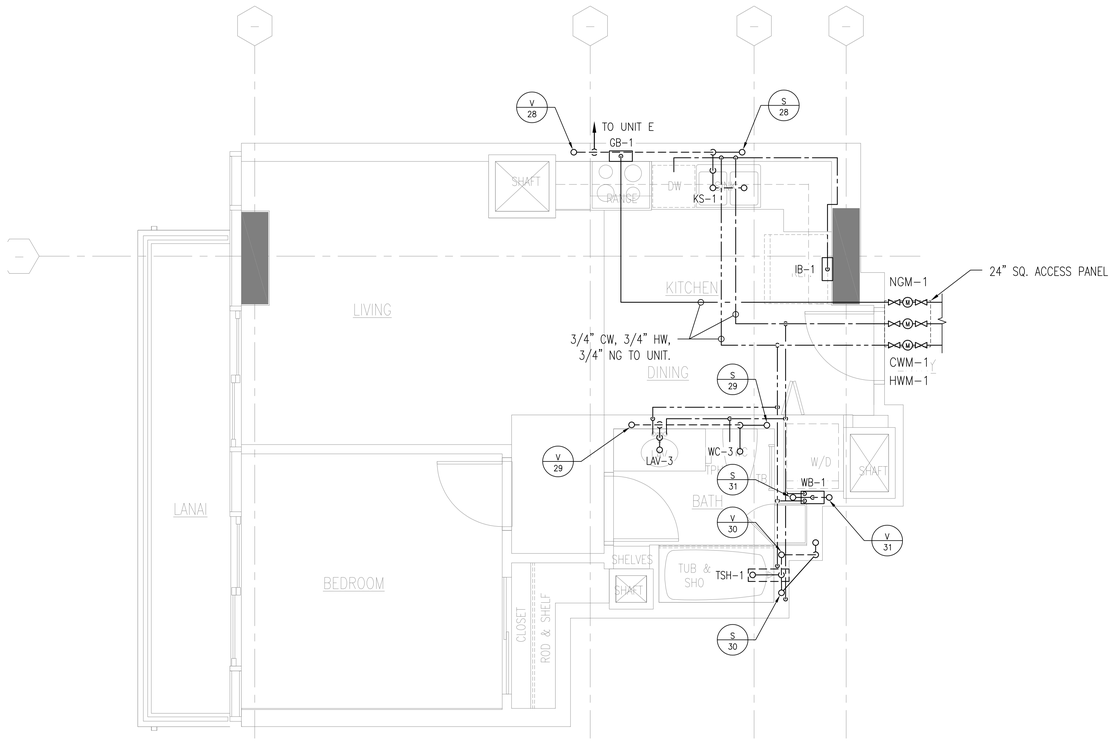

1 PLUMBING PLAN - UNIT G
SCALE: 3/8" = 1'-0"

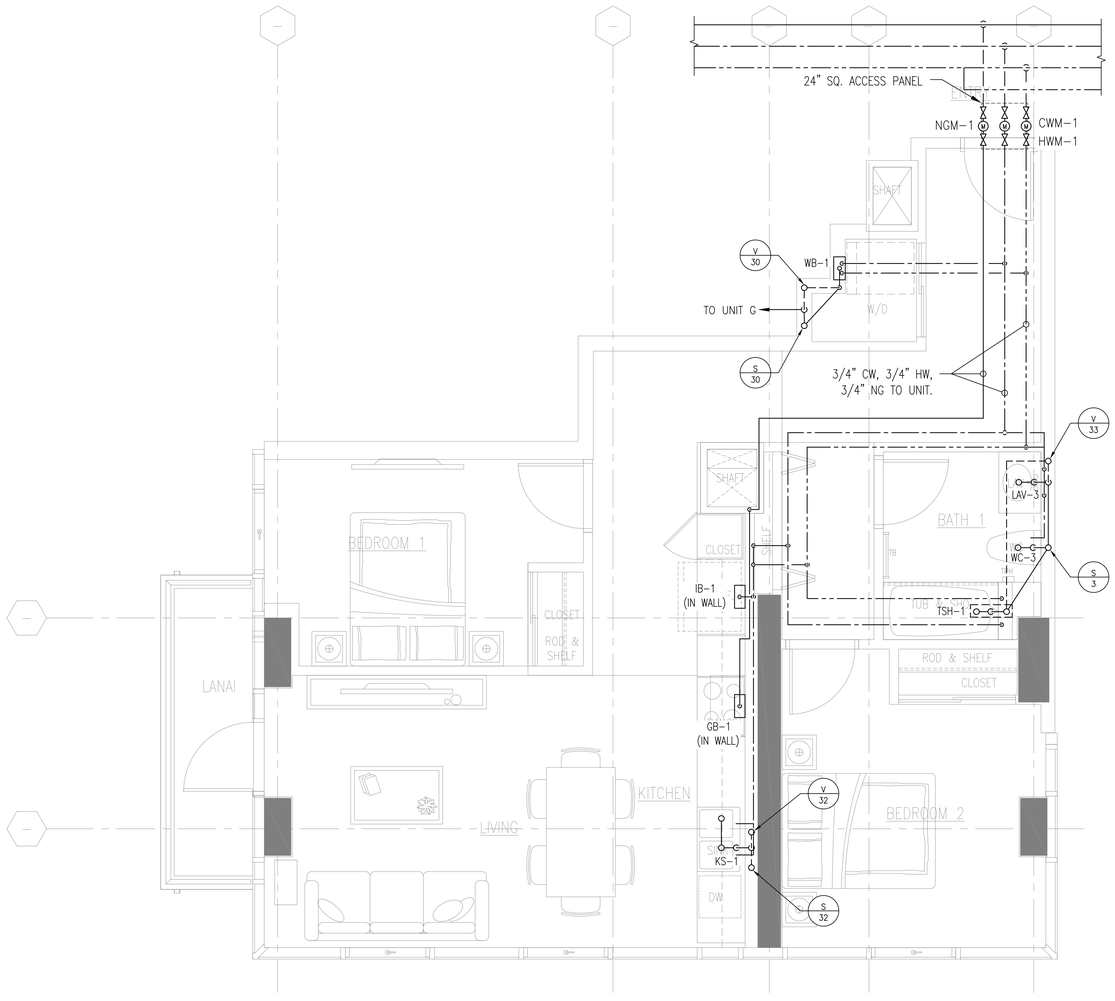

2 PLUMBING PLAN - UNIT H
SCALE: 3/8" = 1'-0"

CROSSLAND ENGINEERING
Big Firm Results. Small Firm Service.
45 S. Lewers Street, Honolulu, HI 96815
(808) 462-8646 | info@crosslandeng.com | www.crosslandeng.com

ENGINEER:
THIS WORK WAS PREPARED BY ME OR UNDER MY SUPERVISION AND CONSTRUCTION OF THIS PROJECT WILL BE UNDER MY OBSERVATION.

ANDREW S. CROSSLAND
LICENSED PROFESSIONAL ENGINEER
No. 16028-M
HAWAII U.S.A.

EXPIRES: 4/30/2020

DEVELOPER:
CALIFORNIA INVESTMENT REGIONAL CENTER, LLC

PROJECT OWNER:
HAWAII CITY PLAZA, LP

Hawaii City Plaza
Honolulu, Hawaii
710 Sheridan Street
TMK 2-3-014: Parcels 002, 004, & 011

PERMIT SET

DATE 2019 MARCH 19

PROJECT # 15028-02

SHEET TITLE
ENLARGED PLUMBING PLAN - UNIT TYPES G & H

SHEET NO.
P-205

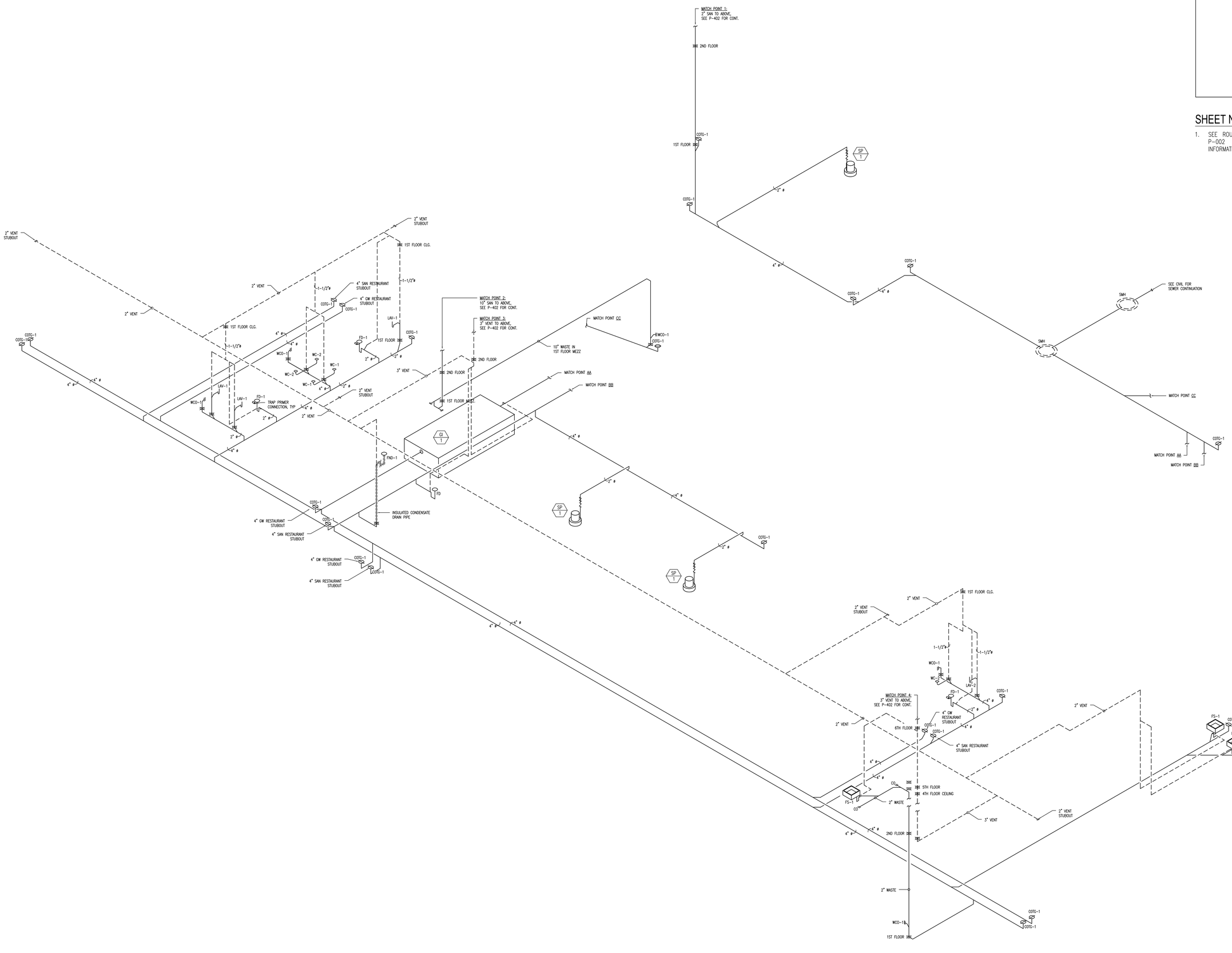

SHEET NOTES

1. SEE ROUGH-IN SCHEDULE ON SHEET P-002 FOR ADDITIONAL PIPE SIZE INFORMATION.

1 PLUMBING ISOMETRICS - WASTE & VENT
SCALE: NOT TO SCALE

CROSSLAND ENGINEERING
Big Firm Results. Small Firm Service.
1571 Lusu Street, Honolulu, HI 96813
808.462.8484 | info@crossland.eng.com | www.crossland.eng.com

ENGINEER:
THIS WORK WAS PREPARED BY ME OR UNDER MY SUPERVISION AND CONSTRUCTION OF THIS PROJECT WILL BE UNDER MY OBSERVATION.

ANDREW S. CROSSLAND
LICENSED PROFESSIONAL ENGINEER
No. 16028-M
HAWAII U.S.A.

EXPIRES:4/30/2020

DEVELOPER:
CALIFORNIA INVESTMENT REGIONAL CENTER, LLC

PROJECT OWNER:
HAWAII CITY PLAZA, LP

Hawaii City Plaza
Honolulu, Hawaii
710 Sheridan Street
TMK 2-3-014: Parcels 002, 004, & 011

PERMIT SET

DATE 2019 MARCH 19

PROJECT # 15028-02

SHEET TITLE
PLUMBING ISOMETRICS - WASTE & VENT

SHEET NO.
P-401

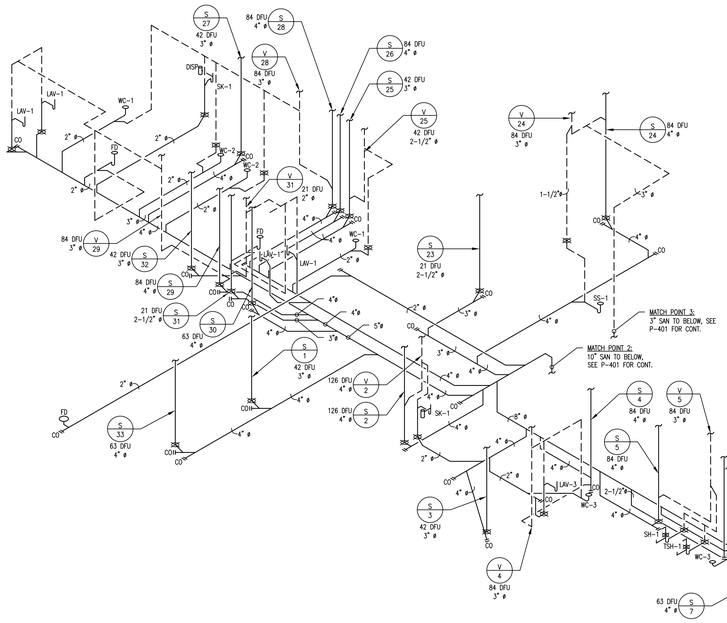

1 PLUMBING ISOMETRICS - WASTE & VENT
SCALE: NOT TO SCALE

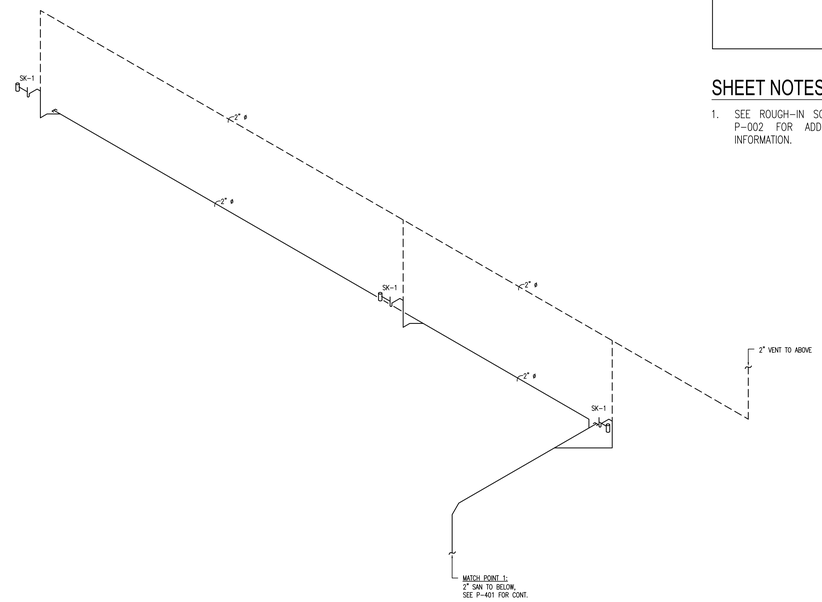

2 PLUMBING ISOMETRICS - WASTE & VENT (6TH FLOOR DECK)
SCALE: NOT TO SCALE

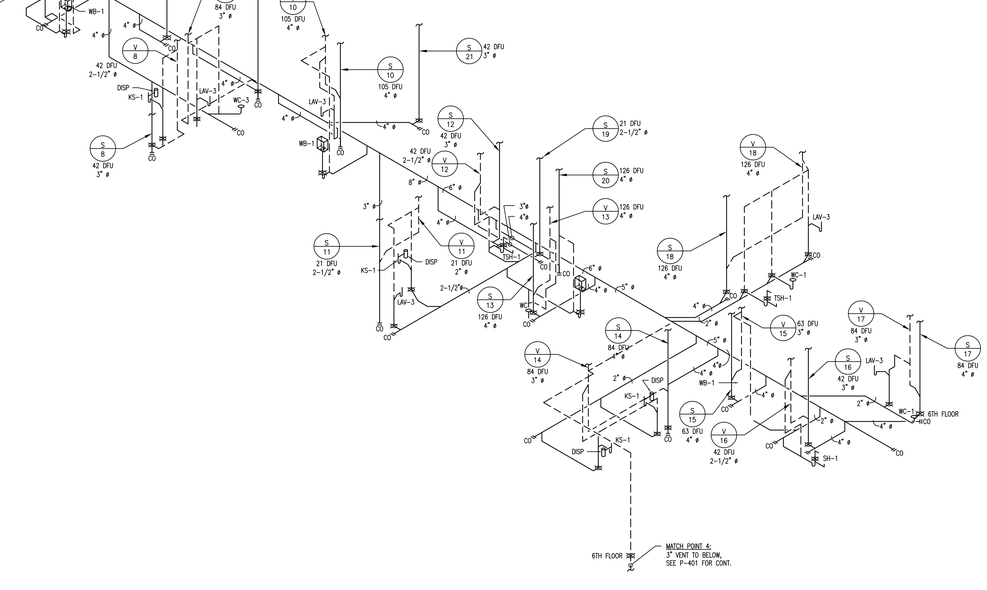

SHEET NOTES

1. SEE ROUGH-IN SCHEDULE ON SHEET P-002 FOR ADDITIONAL PIPE SIZE INFORMATION.

CROSSLAND ENGINEERING
Big Firm Results. Small Firm Service.
1571 Lusa Street, Honolulu, HI 96822
808.462.8400 | info@crossland-eng.com | www.crossland-eng.com

ENGINEER:
THIS WORK WAS PREPARED BY ME OR UNDER MY SUPERVISION AND CONSTRUCTION OF THIS PROJECT WILL BE UNDER MY OBSERVATION.

ANDREW S. CROSSLAND
LICENSED PROFESSIONAL ENGINEER
No. 16028-M
HAWAII U.S.A.

EXPIRES:4/30/2020

DEVELOPER:
CALIFORNIA INVESTMENT REGIONAL CENTER, LLC

PROJECT OWNER:
HAWAII CITY PLAZA, LP

Hawaii City Plaza
Honolulu, Hawaii
710 Sheridan Street
TMK 2-3-014: Parcels 002, 004, & 011

PERMIT SET

DATE 2019 MARCH 19

PROJECT # 15028-02

SHEET TITLE
PLUMBING ISOMETRICS - WASTE & VENT

SHEET NO.
P-402

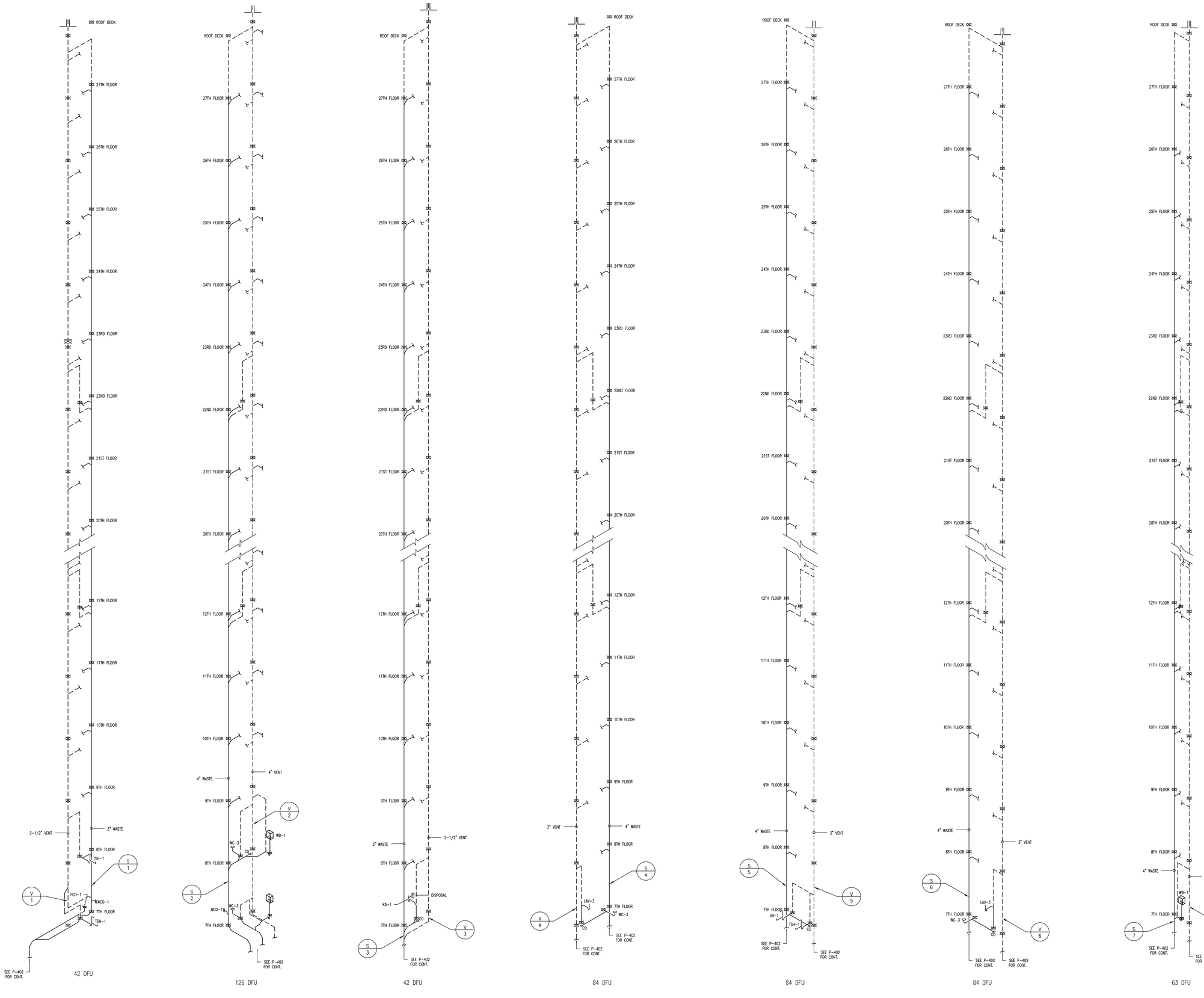

1 PLUMBING ISOMETRICS - WASTE & VENT
SCALE: NOT TO SCALE

SHEET NOTES

1. SEE ROUGH-IN SCHEDULE ON SHEET P-002 FOR ADDITIONAL PIPE SIZE INFORMATION.

CROSSLAND ENGINEERING
Big Firm Results. Small Firm Service.
1571 Lusa Street, Honolulu, HI 96822
(808) 452-8400 | info@crossland-eng.com | www.crossland-eng.com

ENGINEER:
THIS WORK WAS PREPARED BY ME OR UNDER MY SUPERVISION AND CONSTRUCTION OF THIS PROJECT WILL BE UNDER MY OBSERVATION.

ANDREW S. CROSSLAND
LICENSED PROFESSIONAL ENGINEER
No. 16028-M
HAWAII U.S.A.

EXPIRES: 4/30/2020

DEVELOPER:
CALIFORNIA INVESTMENT REGIONAL CENTER, LLC

PROJECT OWNER:
HAWAII CITY PLAZA, LP

Hawaii City Plaza
Honolulu, Hawaii
710 Sheridan Street
TMK 2-3-014: Parcels 002, 004, & 011

PERMIT SET

DATE 2019 MARCH 19

PROJECT # 15028-02

SHEET TITLE
PLUMBING ISOMETRICS - WASTE & VENT

SHEET NO.
P-403

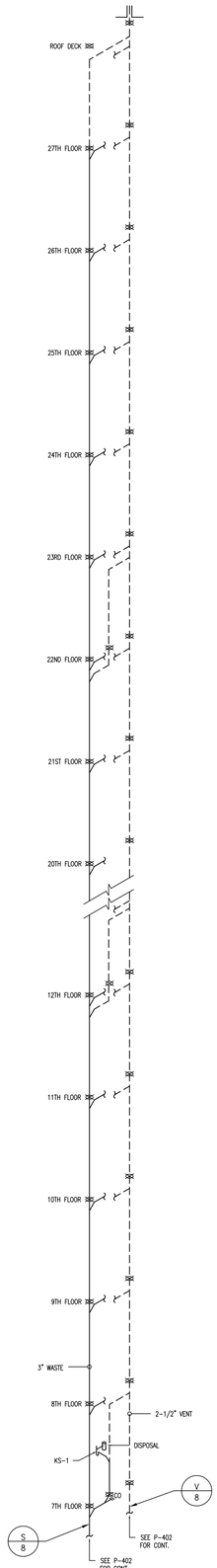

42 DFU

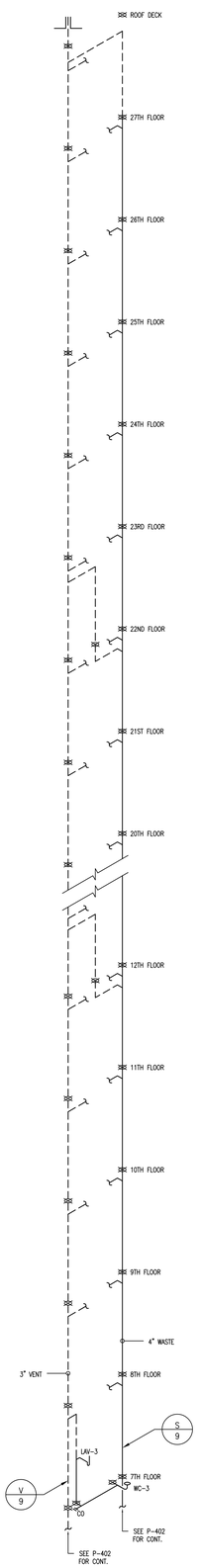

84 DFU

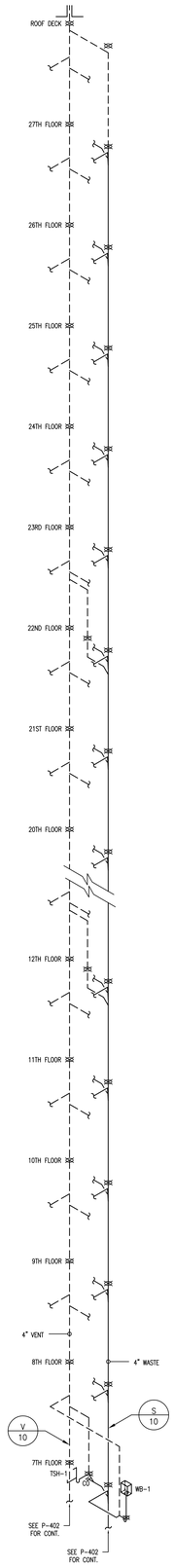

105 DFU

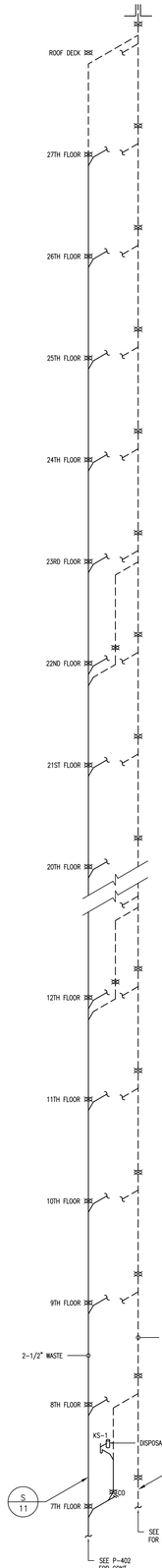

21 DFU

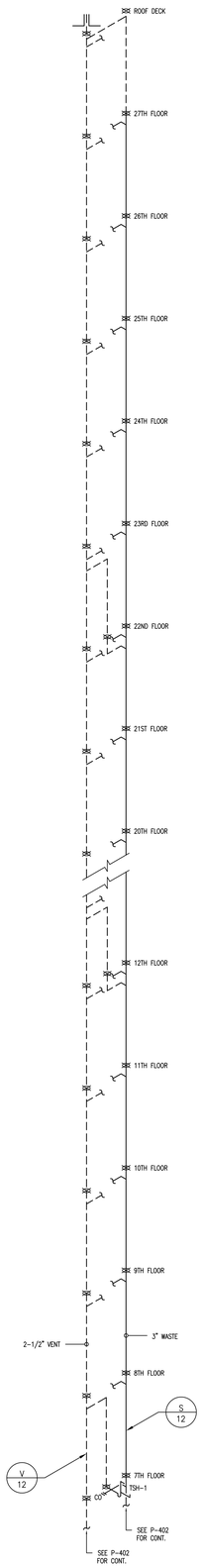

42 DFU

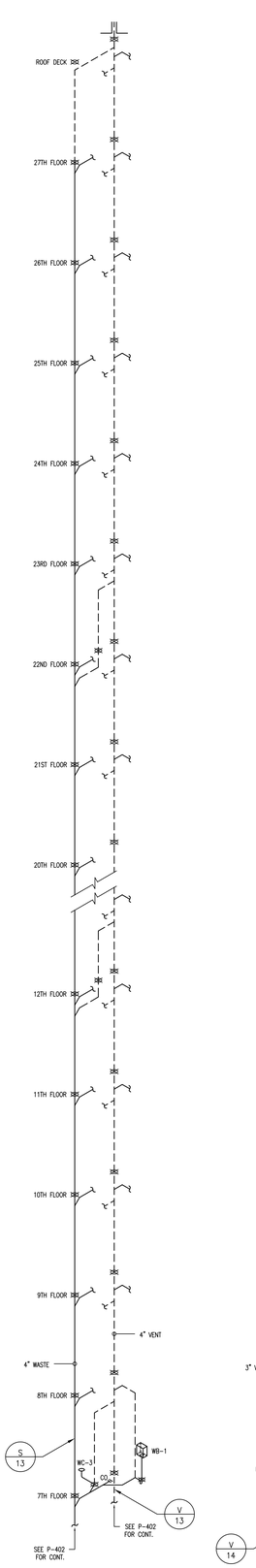

126 DFU

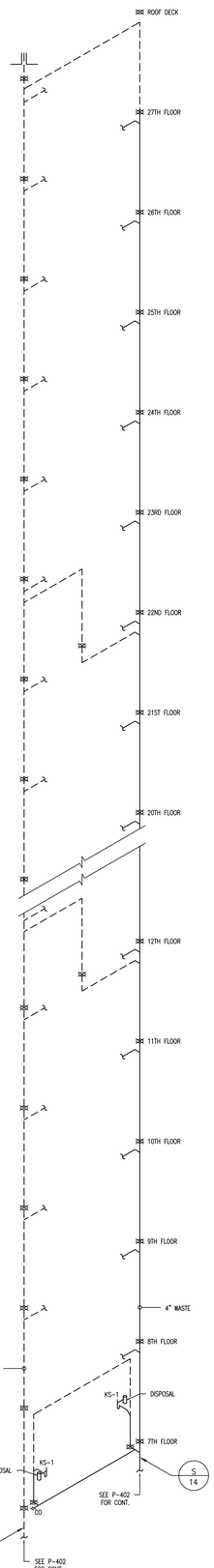

84 DFU

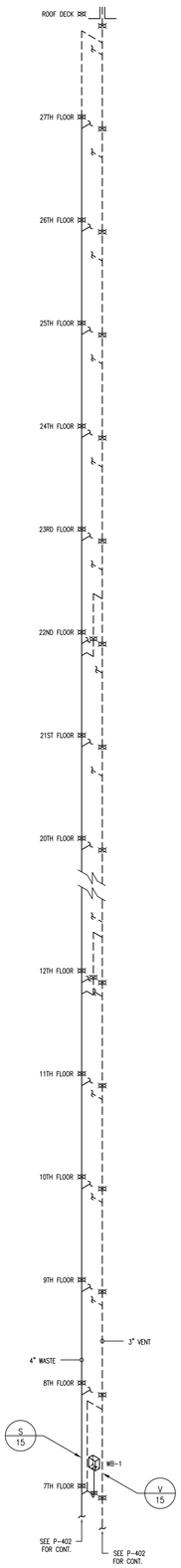

63 DFU

1 PLUMBING ISOMETRICS - WASTE & VENT

SCALE: NOT TO SCALE

SHEET NOTES

1. SEE ROUGH-IN SCHEDULE ON SHEET P-002 FOR ADDITIONAL PIPE SIZE INFORMATION.

CROSSLAND ENGINEERING
Big Firm Results. Small Firm Service.
67th Lewers Street, Honolulu, HI 96822
(808) 462-8481 | info@crosslandeng.com | www.crosslandeng.com

ENGINEER:

THIS WORK WAS PREPARED BY ME OR UNDER MY SUPERVISION AND CONSTRUCTION OF THIS PROJECT WILL BE UNDER MY OBSERVATION.

ANDREW S. CROSSLAND
LICENSED PROFESSIONAL ENGINEER
No. 16028-M
HAWAII U.S.A.

EXPIRES: 4/30/2020

DEVELOPER:
CALIFORNIA INVESTMENT REGIONAL CENTER, LLC

PROJECT OWNER:
HAWAII CITY PLAZA, LP

Hawaii City Plaza
Honolulu, Hawaii

710 Sheridan Street
TMK 2-3-014: Parcels 002, 004, & 011

PERMIT SET

DATE 2019 MARCH 19

PROJECT # 15028-02

SHEET TITLE
PLUMBING ISOMETRICS - WASTE & VENT

SHEET NO.
P-404

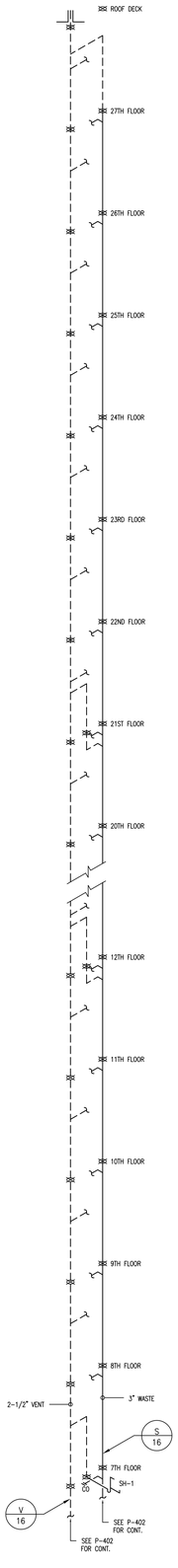

42 DFU

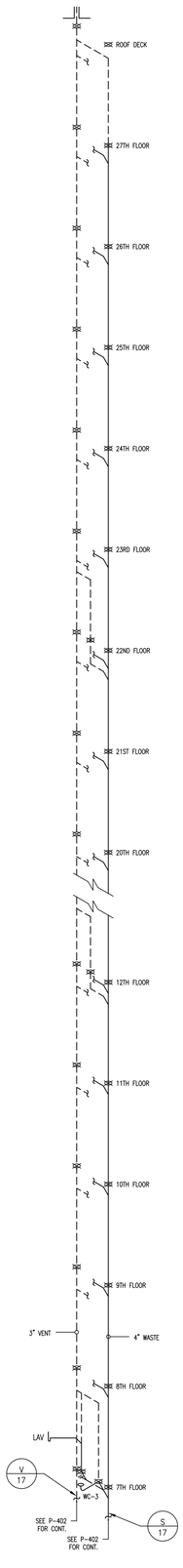

84 DFU

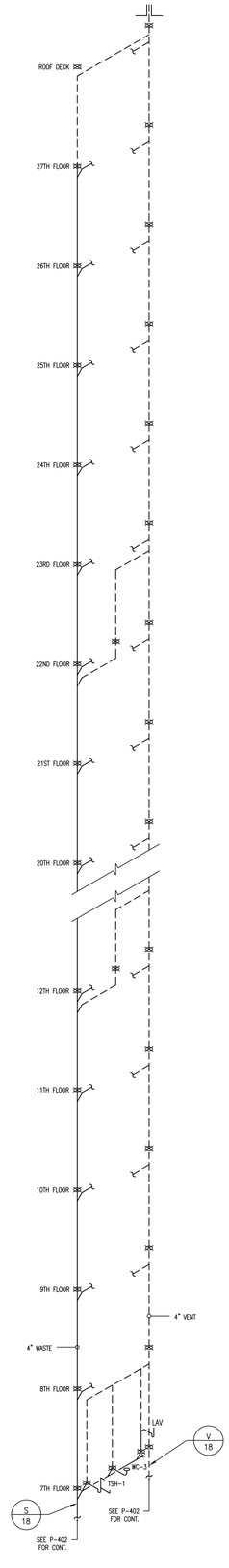

126 DFU

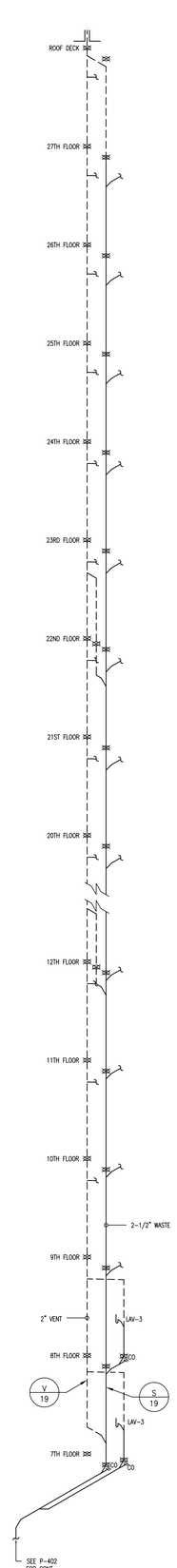

21 DFU

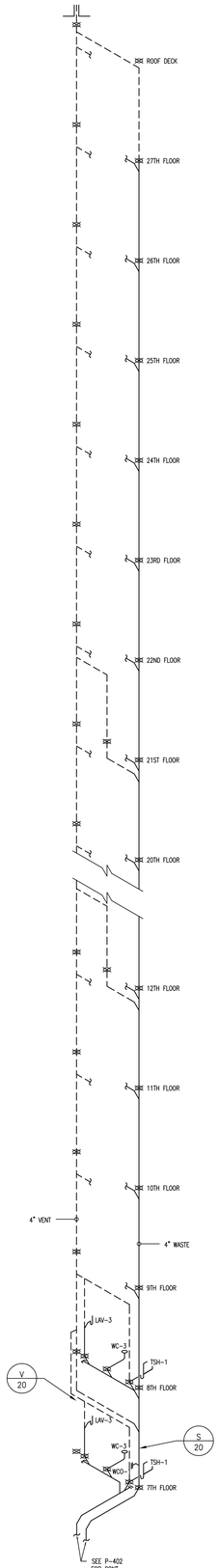

126 DFU

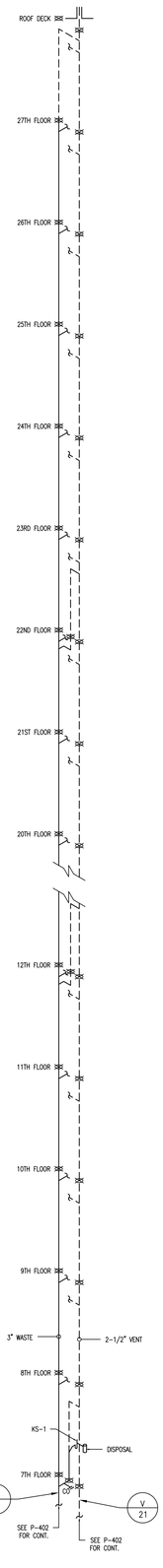

42 DFU

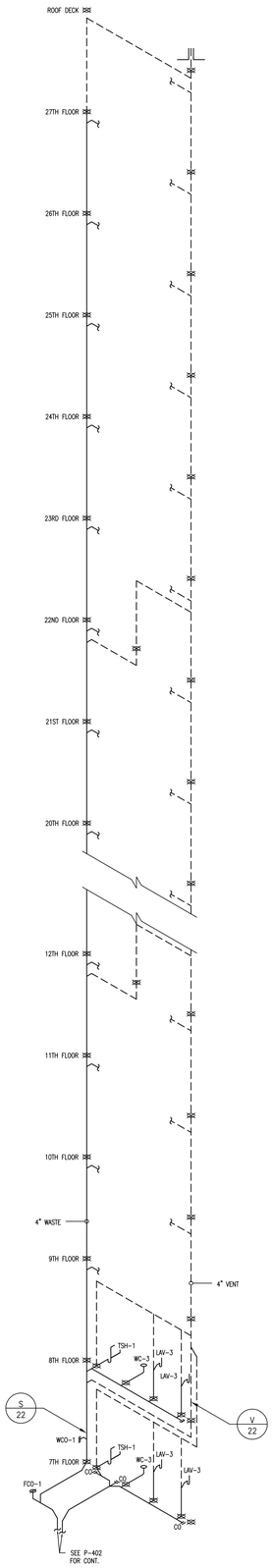

147 DFU

1 PLUMBING ISOMETRICS - WASTE & VENT

SCALE: NOT TO SCALE

SHEET NOTES

1. SEE ROUGH-IN SCHEDULE ON SHEET P-002 FOR ADDITIONAL PIPE SIZE INFORMATION.

CROSSLAND ENGINEERING
Big Firm Results. Small Firm Service.
921 Lewers Street, Honolulu, HI 96822
(808) 462-8481 | info@crosslandeng.com | www.crosslandeng.com

ENGINEER:

THIS WORK WAS PREPARED BY ME OR UNDER MY SUPERVISION AND CONSTRUCTION OF THIS PROJECT WILL BE UNDER MY OBSERVATION.

ANDREW S. CROSSLAND
LICENSED PROFESSIONAL ENGINEER
No. 16028-M
HAWAII U.S.A.

EXPIRES: 4/30/2020

DEVELOPER:
CALIFORNIA INVESTMENT REGIONAL CENTER, LLC

PROJECT OWNER:
HAWAII CITY PLAZA, LP

Hawaii City Plaza
Honolulu, Hawaii

710 Sheridan Street
TMK 2-3-014: Parcels 002, 004, & 011

PERMIT SET

DATE 2019 MARCH 19

PROJECT # 15028-02

SHEET TITLE
PLUMBING ISOMETRICS - WASTE & VENT

SHEET NO.
P-405

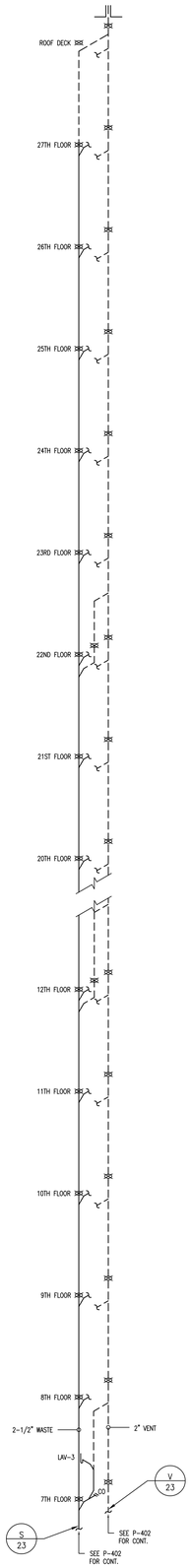

21 DFU

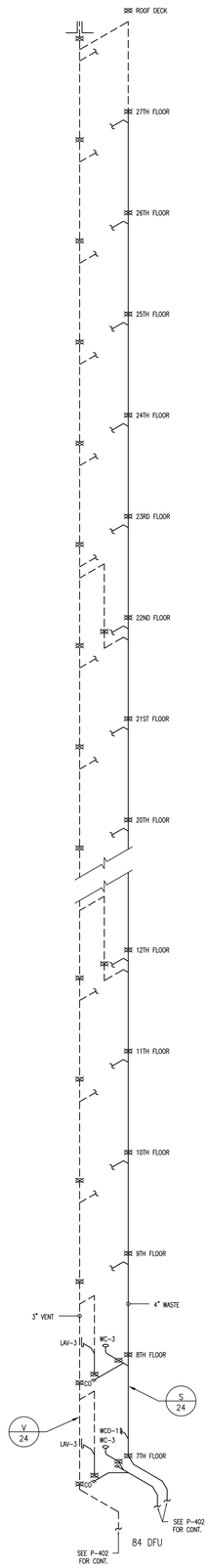

84 DFU

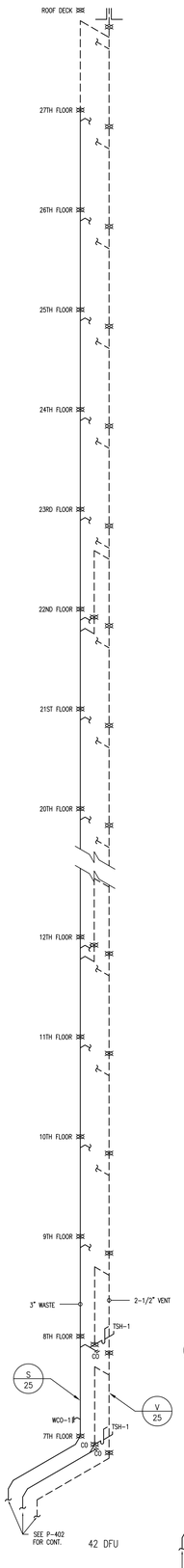

42 DFU

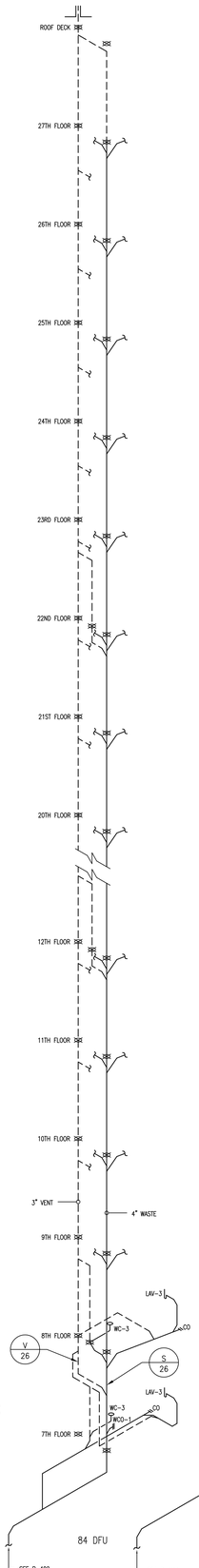

84 DFU

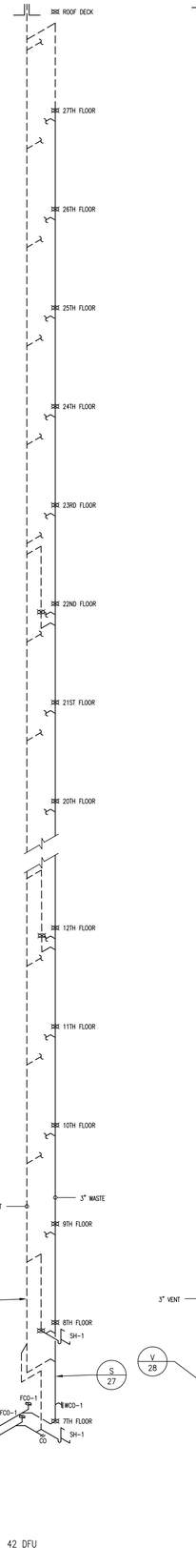

42 DFU

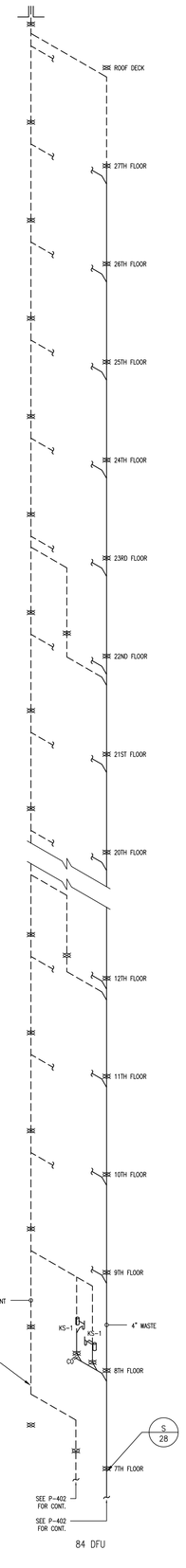

84 DFU

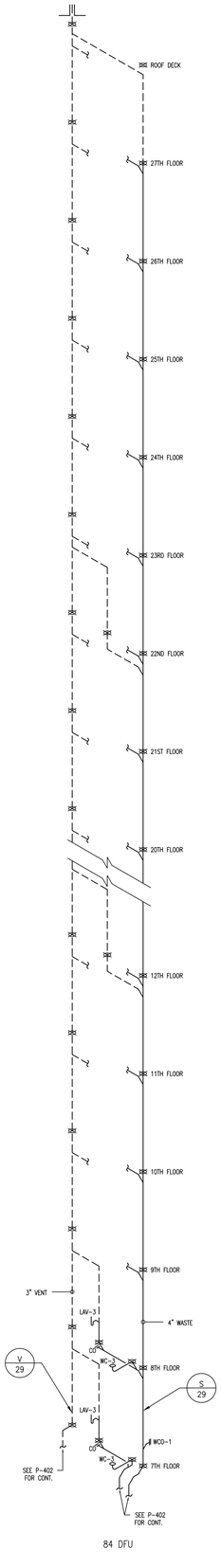

84 DFU

1 PLUMBING ISOMETRICS - WASTE & VENT
SCALE: NOT TO SCALE

SHEET NOTES

1. SEE ROUGH-IN SCHEDULE ON SHEET P-002 FOR ADDITIONAL PIPE SIZE INFORMATION.

CROSSLAND ENGINEERING
Big Firm Results. Small Firm Service.
921 Lewers Street, Honolulu, HI 96822
(808) 462-8640 | info@crosslandeng.com | www.crosslandeng.com

ENGINEER:
THIS WORK WAS PREPARED BY ME OR UNDER MY SUPERVISION AND CONSTRUCTION OF THIS PROJECT WILL BE UNDER MY OBSERVATION.

ANDREW S. CROSSLAND
LICENSED PROFESSIONAL ENGINEER
No. 16028-M
HAWAII U.S.A.

EXPIRES: 4/30/2020

DEVELOPER:
CALIFORNIA INVESTMENT REGIONAL CENTER, LLC

PROJECT OWNER:
HAWAII CITY PLAZA, LP

Hawaii City Plaza
Honolulu, Hawaii
710 Sheridan Street
TMK 2-3-014: Parcels 002, 004, & 011

PERMIT SET

DATE 2019 MARCH 19

PROJECT # 15028-02

SHEET TITLE
PLUMBING ISOMETRICS - WASTE & VENT

SHEET NO.
P-406

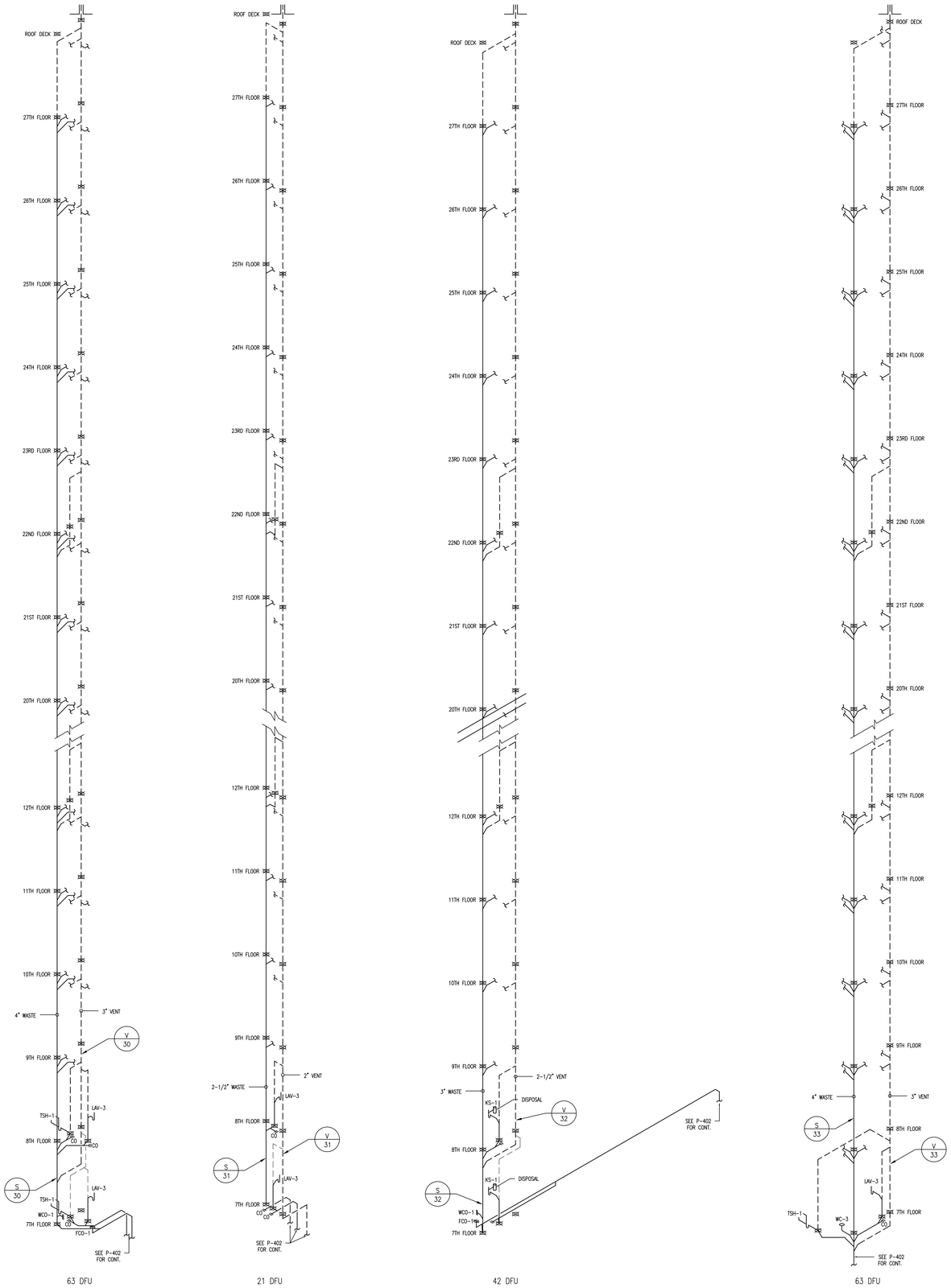

1 PLUMBING ISOMETRICS - WASTE & VENT
SCALE: NOT TO SCALE

SHEET NOTES

1. SEE ROUGH-IN SCHEDULE ON SHEET P-002 FOR ADDITIONAL PIPE SIZE INFORMATION.

CROSSLAND ENGINEERING
Big Firm Results. Small Firm Service.
1571 Lusa Street, Honolulu, HI 96813
808.462.8484 | info@crossland.eng.com www.crossland.eng.com

ENGINEER:
THIS WORK WAS PREPARED BY ME OR UNDER MY SUPERVISION AND CONSTRUCTION OF THIS PROJECT WILL BE UNDER MY OBSERVATION.

ANDREW S. CROSSLAND
LICENSED PROFESSIONAL ENGINEER
No. 16028-M
HAWAII U.S.A.

EXPIRES:4/30/2020

DEVELOPER:
CALIFORNIA INVESTMENT REGIONAL CENTER, LLC

PROJECT OWNER:
HAWAII CITY PLAZA, LP

Hawaii City Plaza
Honolulu, Hawaii
710 Sheridan Street
TMK 2-3-014: Parcels 002, 004, & 011

PERMIT SET

DATE 2019 MARCH 19

PROJECT # 15028-02

SHEET TITLE
PLUMBING ISOMETRICS - WASTE & VENT

SHEET NO.
P-407

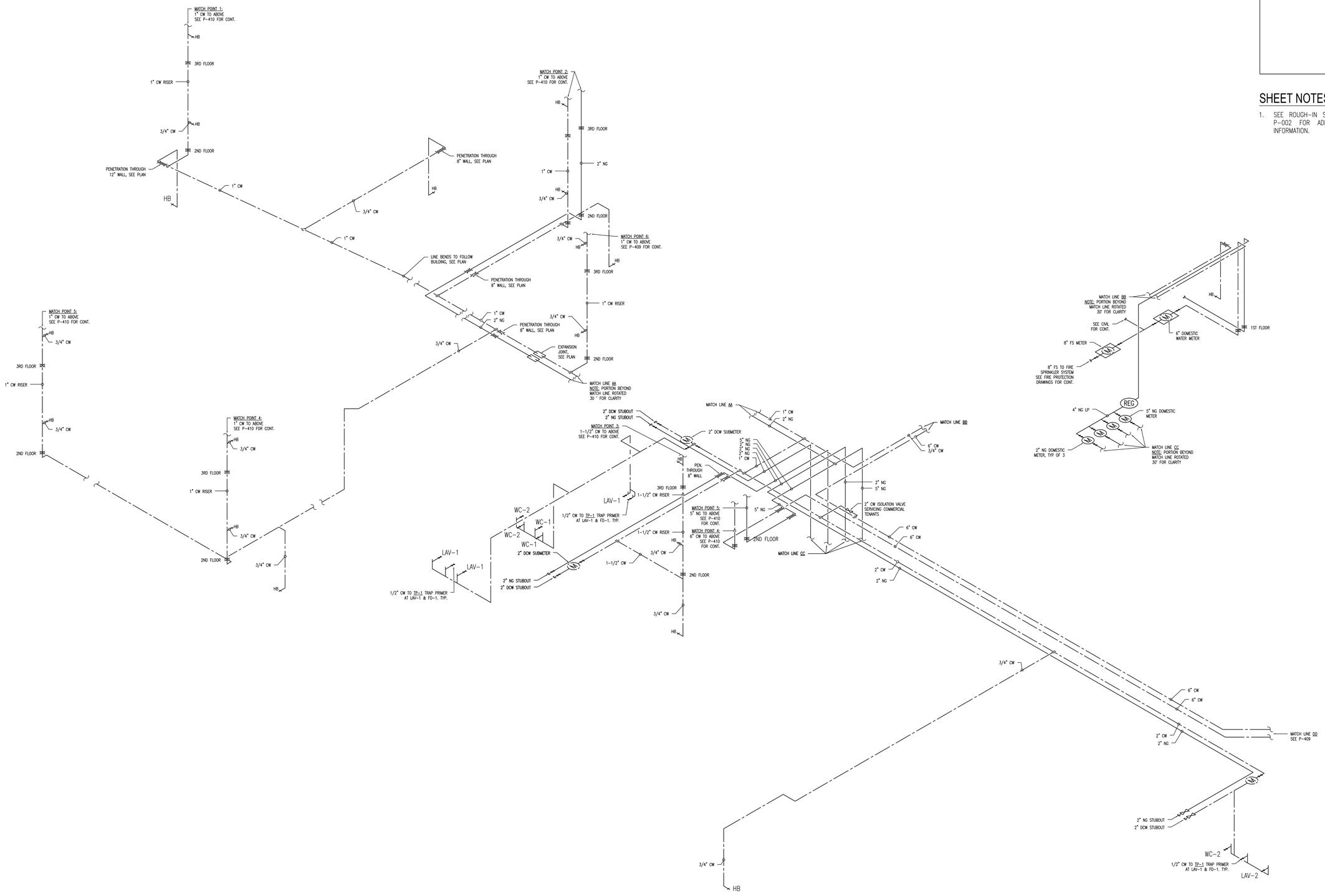

SHEET NOTES

1. SEE ROUGH-IN SCHEDULE ON SHEET P-002 FOR ADDITIONAL PIPE SIZE INFORMATION.

1 PLUMBING ISOMETRICS - WATER & GAS
SCALE: NOT TO SCALE

CROSSLAND ENGINEERING
Big Firm Results. Small Firm Service.
67% Lewers Street, Honolulu, HI 96822
(808) 462-8646 | info@crosslandeng.com | www.crosslandeng.com

ENGINEER:
THIS WORK WAS PREPARED BY ME OR UNDER MY SUPERVISION AND CONSTRUCTION OF THIS PROJECT WILL BE UNDER MY OBSERVATION.

ANDREW S. CROSSLAND
LICENSED PROFESSIONAL ENGINEER
No. 16028-M
HAWAII, U.S.A.

EXPIRES: 4/30/2020

DEVELOPER:
CALIFORNIA INVESTMENT REGIONAL CENTER, LLC

PROJECT OWNER:
HAWAII CITY PLAZA, LP

Hawaii City Plaza
Honolulu, Hawaii
710 Sheridan Street
TMK 2-3-014: Parcels 002, 004, & 011

PERMIT SET

DATE 2019 MARCH 19

PROJECT # 15028-02

SHEET TITLE
PLUMBING ISOMETRICS - WATER & GAS

SHEET NO.
P-408

SHEET NOTES

1. SEE ROUGH-IN SCHEDULE ON SHEET P-002 FOR ADDITIONAL PIPE SIZE INFORMATION.

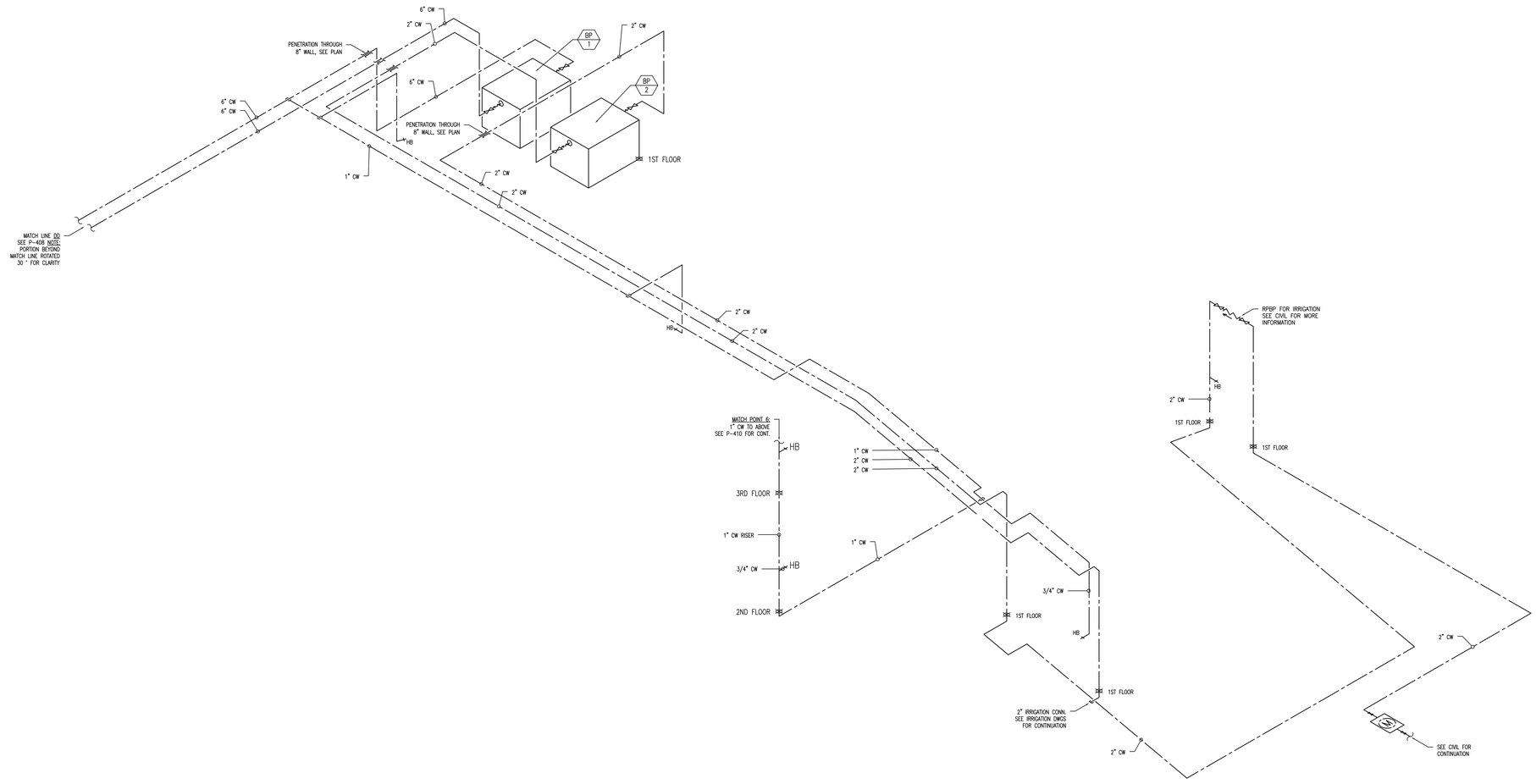

1 PLUMBING ISOMETRICS - WATER & GAS
SCALE: NOT TO SCALE

CROSSLAND ENGINEERING
Big Firm Results. Small Firm Service.
677 Ala Moana Blvd., Suite 1111, Honolulu, HI 96813
(808) 462-8648 | info@crosslandeng.com | www.crosslandeng.com

ENGINEER:
THIS WORK WAS PREPARED BY ME OR UNDER MY SUPERVISION AND CONSTRUCTION OF THIS PROJECT WILL BE UNDER MY OBSERVATION.

ANDREW S. CROSSLAND
LICENSED PROFESSIONAL ENGINEER
No. 16028-M
HAWAII U.S.A.

EXPIRES: 4/30/2020

DEVELOPER:
CALIFORNIA INVESTMENT REGIONAL CENTER, LLC

PROJECT OWNER:
HAWAII CITY PLAZA, LP

Hawaii City Plaza
Honolulu, Hawaii
710 Sheridan Street
TMK 2-3-014: Parcels 002, 004, & 011

PERMIT SET

DATE 2019 MARCH 19

PROJECT # 15028-02

SHEET TITLE
PLUMBING ISOMETRICS - WATER & GAS

SHEET NO.
P-409

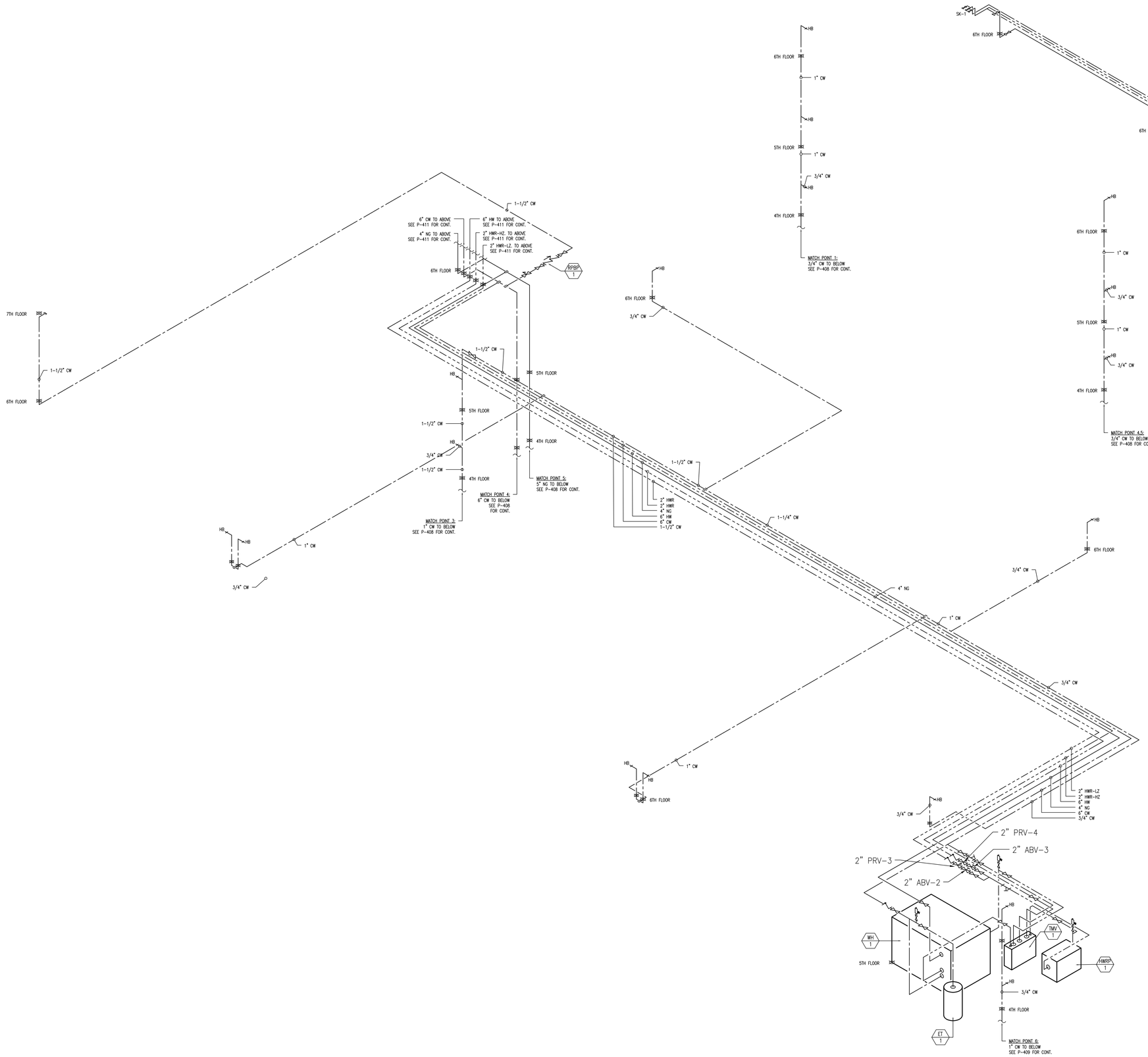

SHEET NOTES

1. SEE ROUGH-IN SCHEDULE ON SHEET P-002 FOR ADDITIONAL PIPE SIZE INFORMATION.

1 PLUMBING ISOMETRICS - WATER & GAS
SCALE: NOT TO SCALE

CROSSLAND ENGINEERING
Big Firm Results. Small Firm Service.
1571 Lusia Street, Honolulu, HI 96822
808.482.8484 | info@crossland-eng.com www.crossland-eng.com

ENGINEER:
THIS WORK WAS PREPARED BY ME OR UNDER MY SUPERVISION AND CONSTRUCTION OF THIS PROJECT WILL BE UNDER MY OBSERVATION.

ANDREW S. CROSSLAND
LICENSED PROFESSIONAL ENGINEER
No. 16028-M
HAWAII U.S.A.

EXPIRES:4/30/2020

DEVELOPER:
CALIFORNIA INVESTMENT REGIONAL CENTER, LLC

PROJECT OWNER:
HAWAII CITY PLAZA, LP

Hawaii City Plaza
Honolulu, Hawaii
710 Sheridan Street
TMK 2-3-014: Parcels 002, 004, & 011

PERMIT SET

DATE 2019 MARCH 19

PROJECT # 15028-02

SHEET TITLE
PLUMBING ISOMETRICS - WATER & GAS

SHEET NO.
P-410

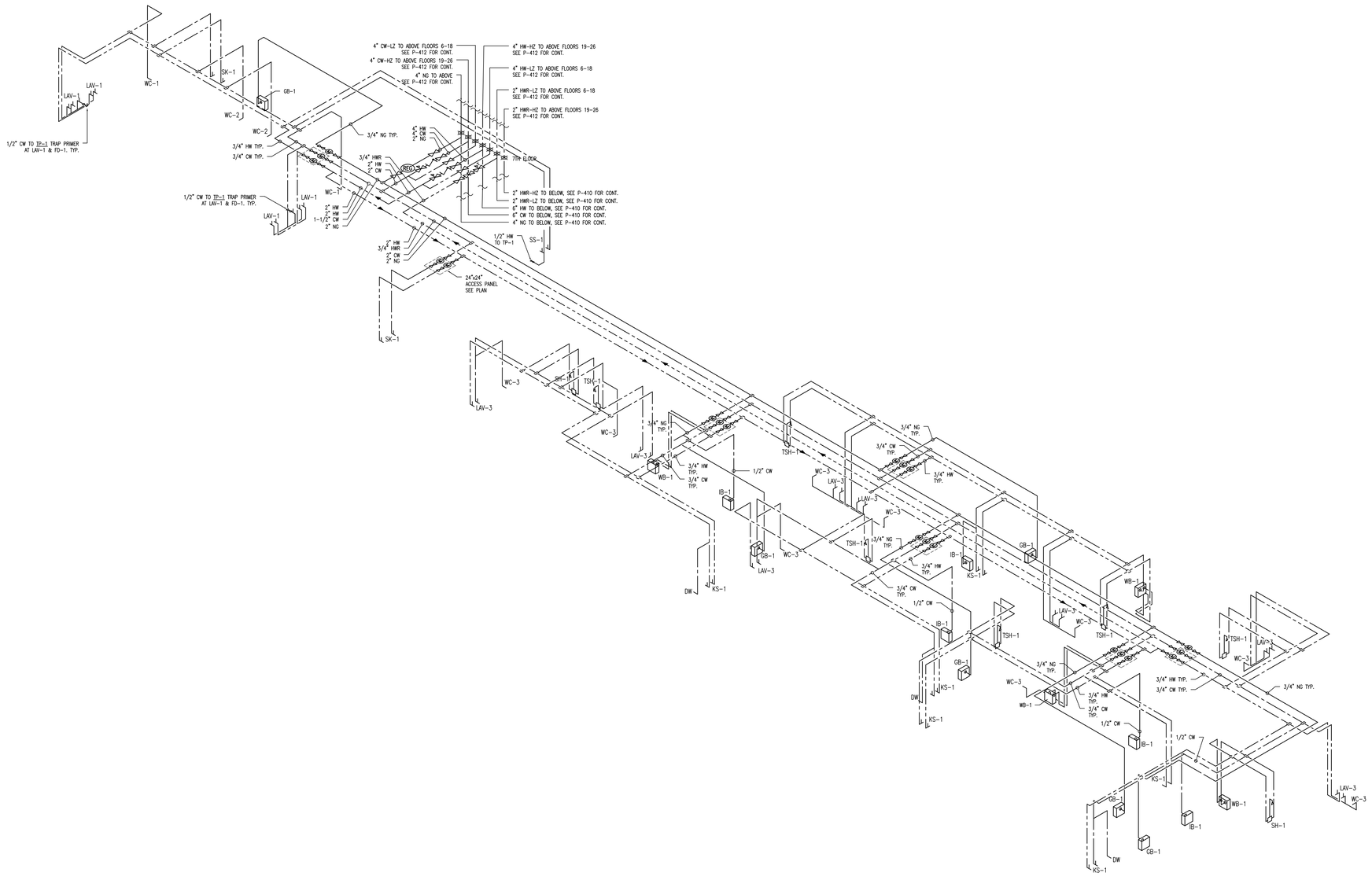

1 PLUMBING ISOMETRICS - WATER & GAS
SCALE: NOT TO SCALE

SHEET NOTES

1. SEE ROUGH-IN SCHEDULE ON SHEET P-002 FOR ADDITIONAL PIPE SIZE INFORMATION.

CROSSLAND ENGINEERING
Big Firm Results. Small Firm Service.
1571 Lusu Street, Honolulu, HI 96813
808.462.8400 | info@crossland-eng.com www.crossland-eng.com

ENGINEER:
THIS WORK WAS PREPARED BY ME OR UNDER MY SUPERVISION AND CONSTRUCTION OF THIS PROJECT WILL BE UNDER MY OBSERVATION.

ANDREW S. CROSSLAND
LICENSED PROFESSIONAL ENGINEER
No. 16028-M
HAWAII U.S.A.

EXPIRES:4/30/2020

DEVELOPER:
CALIFORNIA INVESTMENT REGIONAL CENTER, LLC

PROJECT OWNER:
HAWAII CITY PLAZA, LP

Hawaii City Plaza
Honolulu, Hawaii
710 Sheridan Street
TMK 2-3-014: Parcels 002, 004, & 011

PERMIT SET

DATE 2019 MARCH 19

PROJECT # 15028-02

SHEET TITLE
PLUMBING ISOMETRICS - WATER & GAS

SHEET NO.
P-411

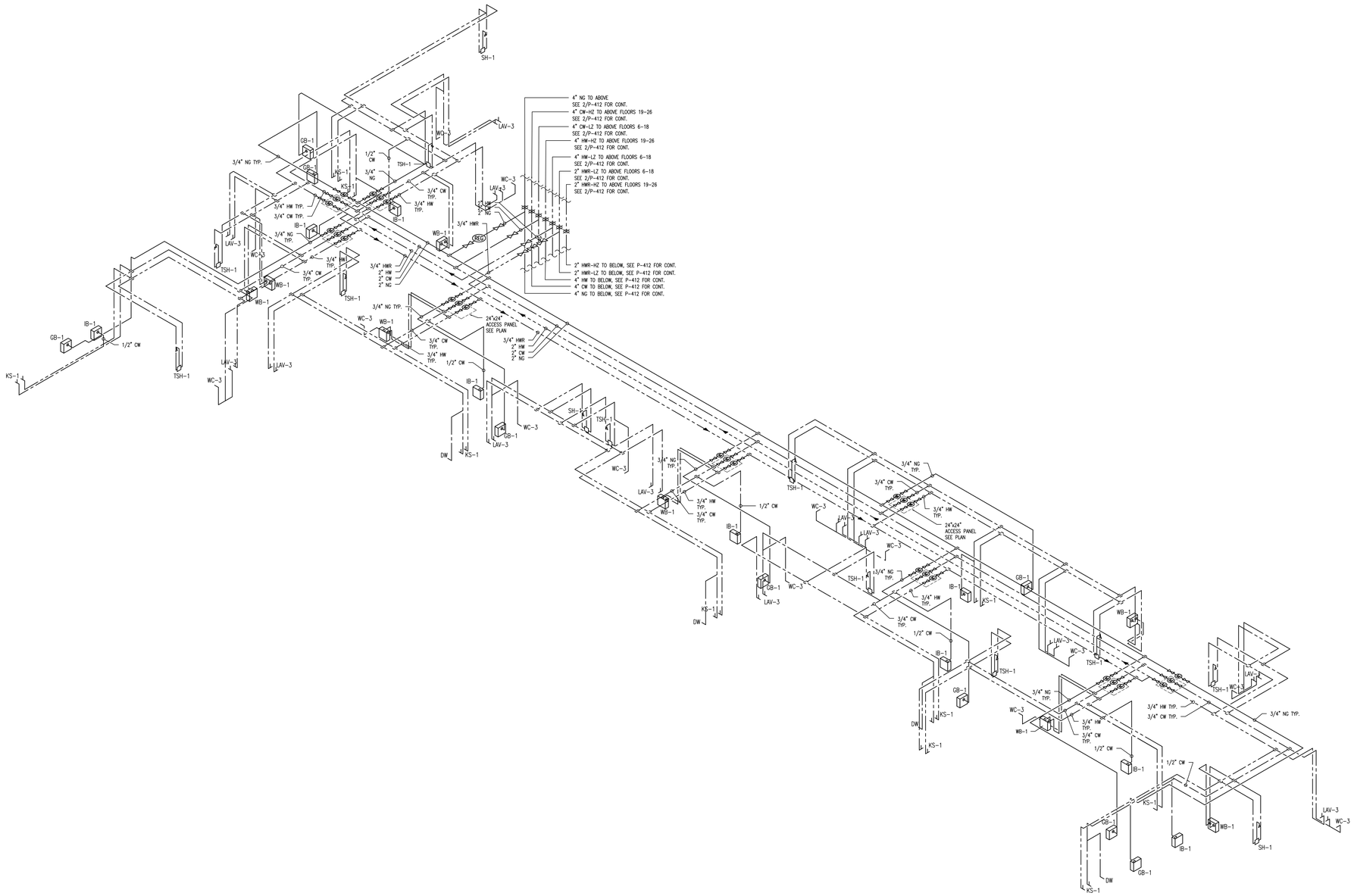

1 PLUMBING ISOMETRICS - WATER & GAS
SCALE: NOT TO SCALE

SHEET NOTES

1. SEE ROUGH-IN SCHEDULE ON SHEET P-002 FOR ADDITIONAL PIPE SIZE INFORMATION.

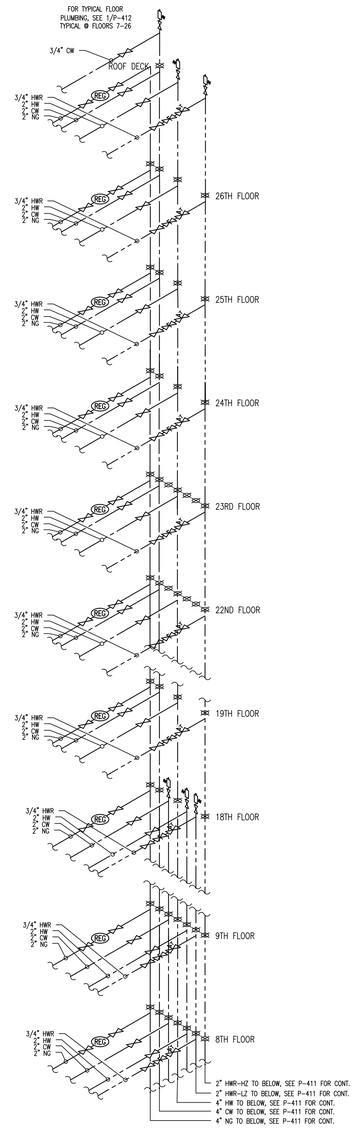

2 7-28TH FLOOR PLUMBING RISERS
SCALE: NOT TO SCALE

CROSSLAND ENGINEERING
Big Firm Results. Small Firm Service.

ENGINEER:
THIS WORK WAS PREPARED BY ME OR UNDER MY SUPERVISION AND CONSTRUCTION OF THIS PROJECT WILL BE UNDER MY OBSERVATION.

ANDREW S. CROSSLAND
LICENSED PROFESSIONAL ENGINEER
No. 16028-M
HAWAII U.S.A.

EXPIRES:4/30/2020

DEVELOPER:
CALIFORNIA INVESTMENT REGIONAL CENTER, LLC

PROJECT OWNER:
HAWAII CITY PLAZA, LP

Hawaii City Plaza
Honolulu, Hawaii
710 Sheridan Street
TMK 2-3-014: Parcels 002, 004, & 011

PERMIT SET

DATE 2019 MARCH 19

PROJECT # 15028-02

SHEET TITLE
PLUMBING ISOMETRICS - WATER & GAS

SHEET NO.
P-412

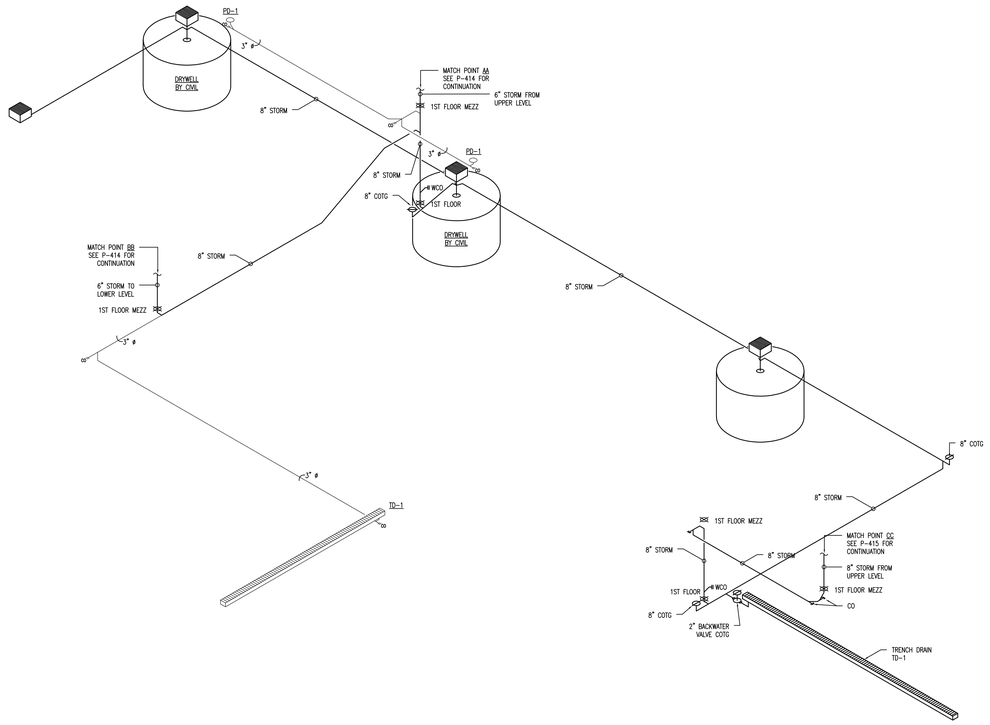

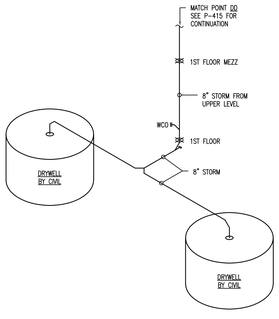

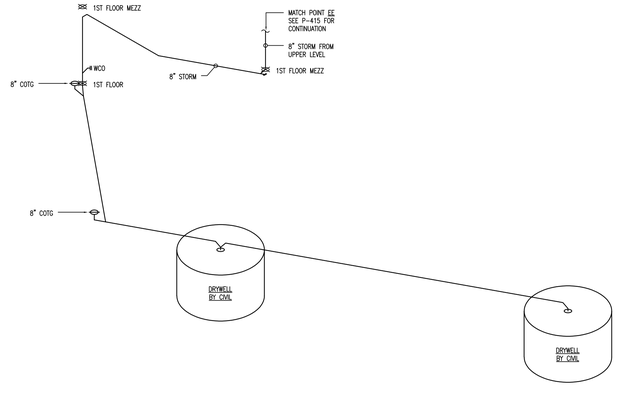

1 PLUMBING ISOMETRICS - STORM
SCALE: NOT TO SCALE

SHEET NOTES

1. SEE ROUGH-IN SCHEDULE ON SHEET P-002 FOR ADDITIONAL PIPE SIZE INFORMATION.

CROSSLAND ENGINEERING
Big Firm Results. Small Firm Service.
2511 Lake Street, Honolulu, HI 96822
808.402.8484 info@crossland-eng.com www.crossland-eng.com

ENGINEER:
THIS WORK WAS PREPARED BY ME OR UNDER MY SUPERVISION AND CONSTRUCTION OF THIS PROJECT WILL BE UNDER MY OBSERVATION.

ANDREW S. CROSSLAND
LICENSED PROFESSIONAL ENGINEER
No. 16028-M
HAWAII U.S.A.

EXPIRES:4/30/2020

DEVELOPER:
CALIFORNIA INVESTMENT REGIONAL CENTER, LLC

PROJECT OWNER:
HAWAII CITY PLAZA, LP

Hawaii City Plaza
Honolulu, Hawaii
710 Sheridan Street
TMK 2-3-014: Parcels 002, 004, & 011

PERMIT SET

DATE 2019 MARCH 19

PROJECT # 15028-02

SHEET TITLE
PLUMBING ISOMETRICS - STORM

SHEET NO.
P-413

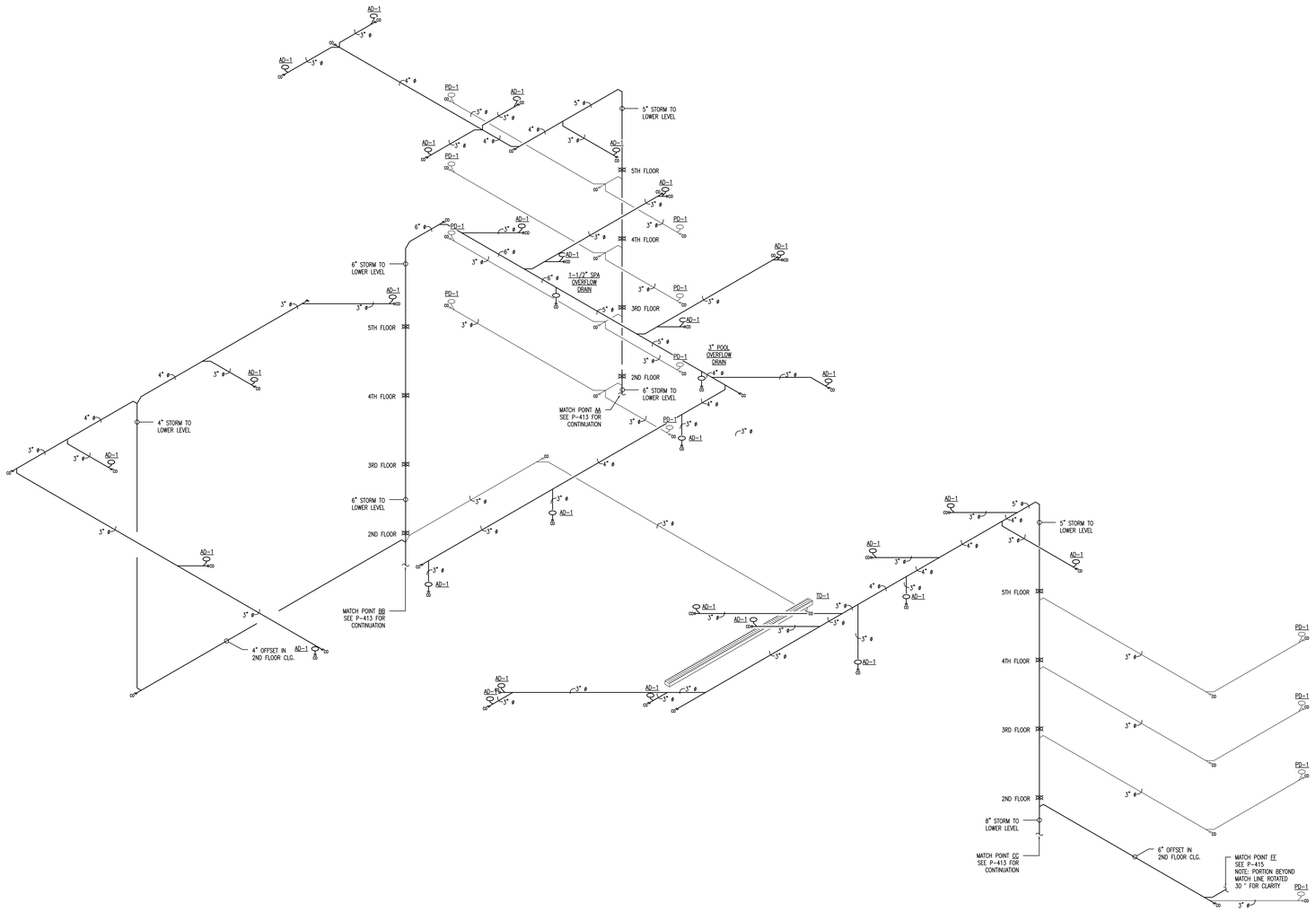

1 PLUMBING ISOMETRICS - STORM
SCALE: NOT TO SCALE

SHEET NOTES

1. SEE ROUGH-IN SCHEDULE ON SHEET P-002 FOR ADDITIONAL PIPE SIZE INFORMATION.

CROSSLAND ENGINEERING
Big Firm Results. Small Firm Service.

ENGINEER:
THIS WORK WAS PREPARED BY ME OR UNDER MY SUPERVISION AND CONSTRUCTION OF THIS PROJECT WILL BE UNDER MY OBSERVATION.

ANDREW S. CROSSLAND
LICENSED PROFESSIONAL ENGINEER
No. 16028-M
HAWAII U.S.A.

EXPIRES:4/30/2020

DEVELOPER:
CALIFORNIA INVESTMENT REGIONAL CENTER, LLC

PROJECT OWNER:
HAWAII CITY PLAZA, LP

Hawaii City Plaza
Honolulu, Hawaii
710 Sheridan Street
TMK 2-3-014: Parcels 002, 004, & 011

PERMIT SET

DATE 2019 MARCH 19

PROJECT # 15028-02

SHEET TITLE
PLUMBING ISOMETRICS - STORM

SHEET NO.
P-414

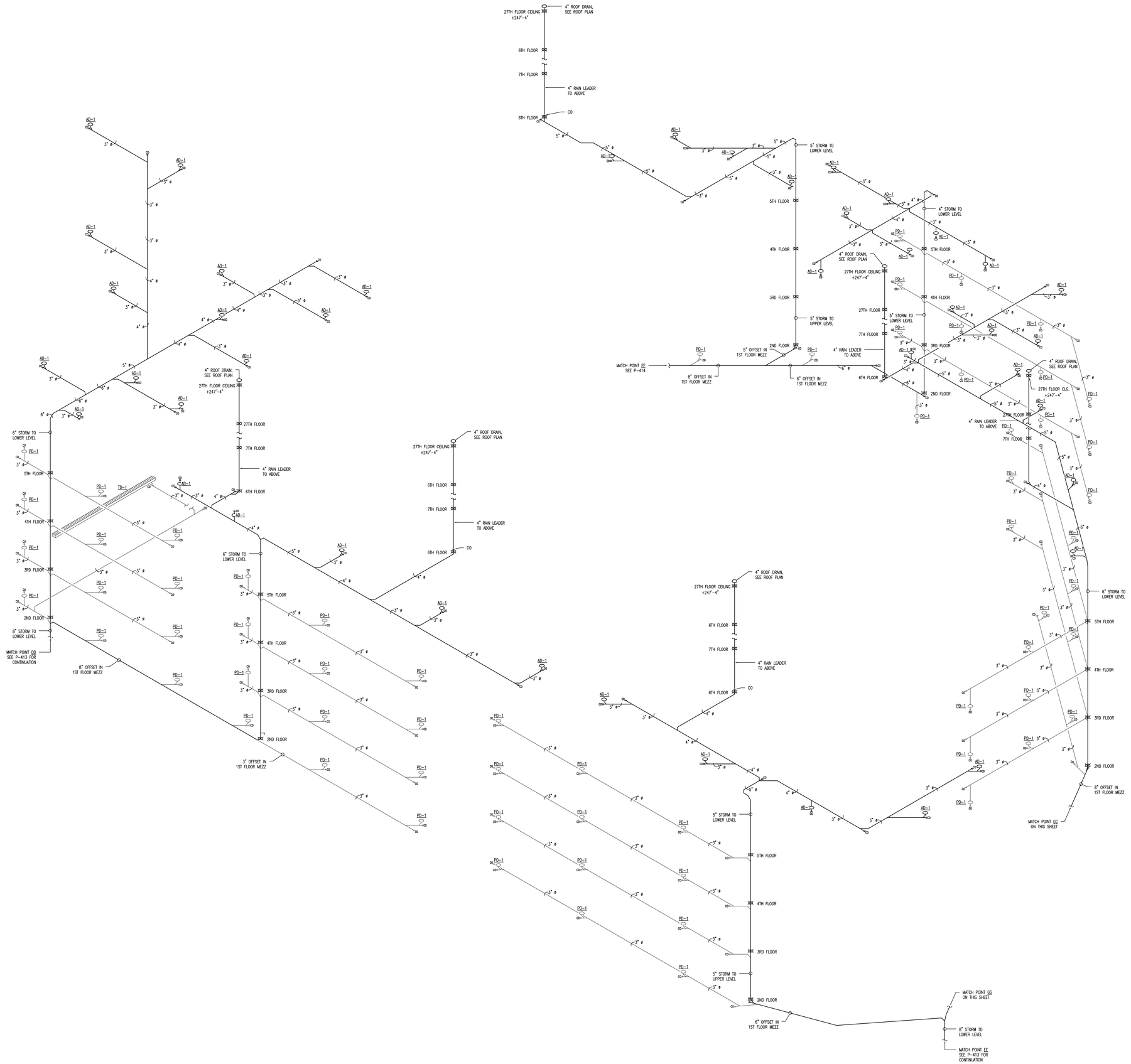

1 PLUMBING ISOMETRICS - STORM
SCALE: NOT TO SCALE

SHEET NOTES

1. SEE ROUGH-IN SCHEDULE ON SHEET P-002 FOR ADDITIONAL PIPE SIZE INFORMATION.

CROSSLAND ENGINEERING
Big Firm Results. Small Firm Service.
57th Laau Street, Honolulu, HI 96822
(808) 462-8686 | info@crosslandeng.com | www.crosslandeng.com

ENGINEER:
THIS WORK WAS PREPARED BY ME OR UNDER MY SUPERVISION AND CONSTRUCTION OF THIS PROJECT WILL BE UNDER MY OBSERVATION.

ANDREW S. CROSSLAND
LICENSED PROFESSIONAL ENGINEER
No. 16028-M
HAWAII U.S.A.

EXPIRES: 4/30/2020

DEVELOPER:
CALIFORNIA INVESTMENT REGIONAL CENTER, LLC

PROJECT OWNER:
HAWAII CITY PLAZA, LP

Hawaii City Plaza
Honolulu, Hawaii
710 Sheridan Street
TMK 2-3-014: Parcels 002, 004, & 011

PERMIT SET

DATE 2019 MARCH 19

PROJECT # 15028-02

SHEET TITLE
PLUMBING ISOMETRICS - STORM

SHEET NO.
P-415

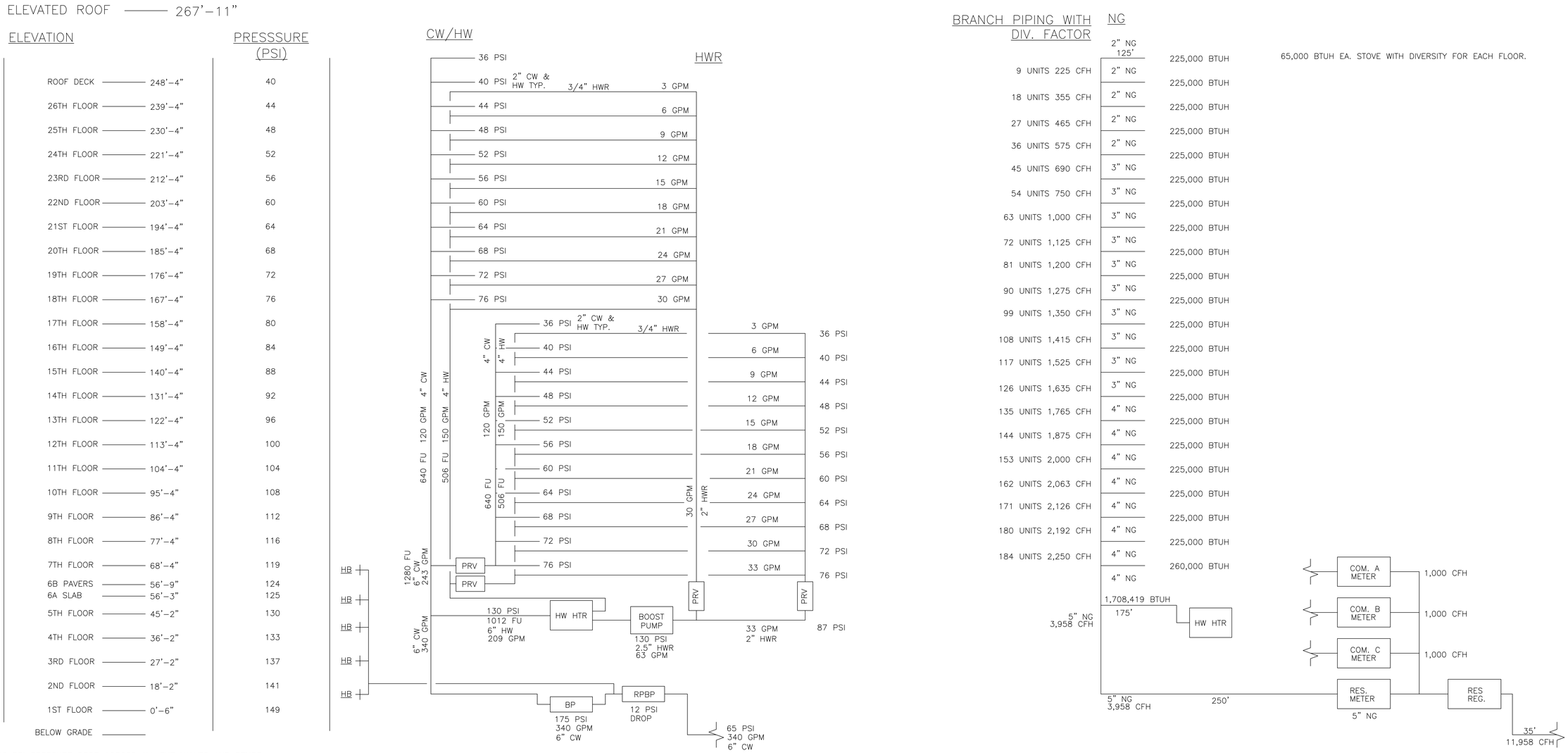

1 PLUMBING RISER DIAGRAMS
SCALE: NOT TO SCALE

CROSSLAND ENGINEERING
Big Firm Results. Small Firm Service.
67[illegible] Laura Street, Honolulu, HI 96822
(808) 462-8646 | info@crosslandeng.com | www.crosslandeng.com

ENGINEER:
THIS WORK WAS PREPARED BY ME OR UNDER MY SUPERVISION AND CONSTRUCTION OF THIS PROJECT WILL BE UNDER MY OBSERVATION.

ANDREW S. CROSSLAND
LICENSED PROFESSIONAL ENGINEER
No. 16028-M
HAWAII U.S.A.

EXPIRES: 4/30/2020

DEVELOPER:
CALIFORNIA INVESTMENT REGIONAL CENTER, LLC

PROJECT OWNER:
HAWAII CITY PLAZA, LP

Hawaii City Plaza
Honolulu, Hawaii
710 Sheridan Street
TMK 2-3-014: Parcels 002, 004, & 011

PERMIT SET

DATE 2019 MARCH 19

PROJECT # 15028-02

SHEET TITLE
PLUMBING RISER DIAGRAMS

SHEET NO.
P-501

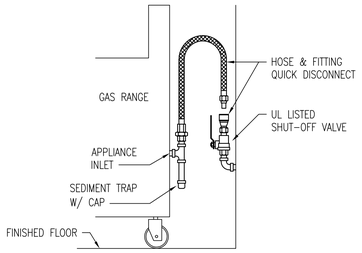

NOTES:

1. PROVIDE QUICK DISCONNECT FOR ALL GAS RANGES IN RESIDENTIAL UNITS AND LOUNGE.

6 GAS RANGE QUICK DISCONNECT DETAIL
NOT TO SCALE

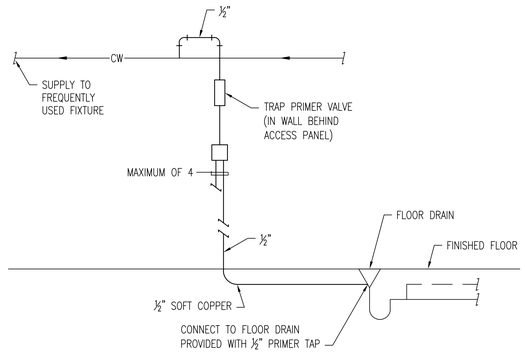

NOTES:

1. PROVIDE DISTRIBUTION UNIT WHEN SERVING MULTIPLE FLOOR DRAINS FROM ONE TRAP PRIMER.

3 TRAP PRIMER DETAIL
NOT TO SCALE

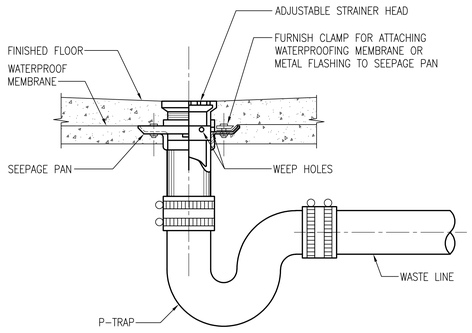

NOTES:

1. PROVIDE TRAP PRIMER TO ALL FLOOR DRAINS UNLESS OTHERWISE NOTED ON PLANS.

7 FLOOR DRAIN DETAIL
NOT TO SCALE

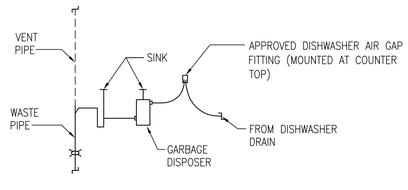

NOTES:

1. IF GARBAGE DISPOSER NOT PROVIDED, CONNECT DISHWASHER TO SINK TAILPIECE ABOVE P-TRAP.

4 DISHWASHER CONNECTION DETAIL
NOT TO SCALE

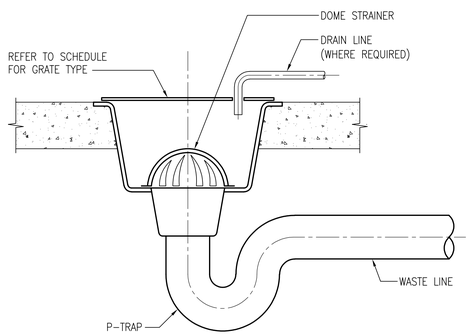

NOTES:

1. PROVIDE INSULATION ON WASTE LINE WHEN RECEIVING AIR-CONDITIONING CONDENSATE AND ABOVE GRADE.

8 FLOOR SINK DETAIL
NOT TO SCALE

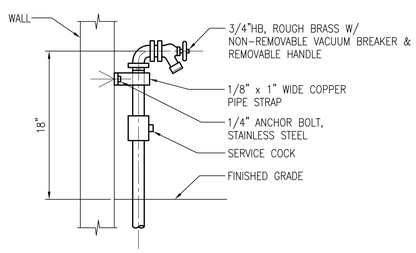

NOTES:

1. PROVIDE FOR ALL MANAUL DAMPERS THAT ARE ABOVE INACCESSIBLE CEILINGS AND ARE WITHOUT AN ACCESS PANEL.
2. COORDINATE LOCATION OF PLATE COVER WITH ARCHITECT AND PROVIDE LOCATION ON SHOP DRAWINGS.
3. SEE SPECIFICATIONS FOR ADDITIONAL DETAILS.

5 EXPOSED HOSE BIBB DETAIL
NOT TO SCALE

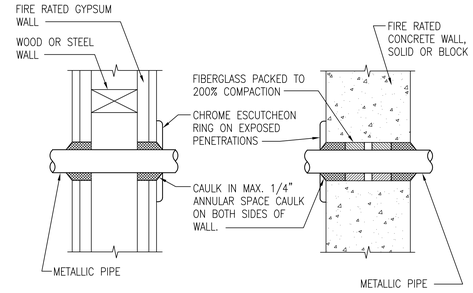

NOTES:

1. SEE SPECIFICATIONS FOR SLEEVE, SLEEVE-SEAL, AND ESCUTCHEON REQUIREMENTS.
2. ALL PIPE PENETRATIONS THROUGH FIRE-RATED WALL ASSEMBLIES SHALL BE PROTECTED BY AN APPROVED THROUGH-PENETRATION FIRESTOP SYSTEM IN ACCORDANCE WITH 2006 IBC AND WITH RATINGS AS DETERMINED BY ASTM E 814 OR UL 1479.
3. WHERE CONFLICT OCCURS, THE ASSEMBLY REQUIREMENTS OF ASTM E 814, UL 1479, AND/OR THE APPROPRIATE UL SYSTEM SHALL SUPERCEDE THIS DETAIL.

1 PIPE THRU FIRE-RATED WALL DETAIL
NOT TO SCALE

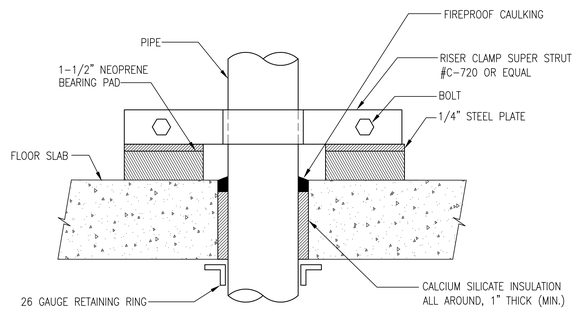

NOTES:

1. SEE SPECIFICATIONS FOR SLEEVE, SLEEVE-SEAL, AND RISER CLAMP REQUIREMENTS.
2. ALL PIPE PENETRATIONS THROUGH FIRE-RATED ASSEMBLIES SHALL BE PROTECTED BY AN APPROVED THROUGH-PENETRATION FIRESTOP SYSTEM IN ACCORDANCE WITH 2006 IBC AND WITH RATINGS AS DETERMINED BY ASTM E 814 OR UL 1479.
3. WHERE CONFLICT OCCURS, THE ASSEMBLY REQUIREMENTS OF ASTM E 814, UL 1479, AND/OR THE APPROPRIATE UL SYSTEM SHALL SUPERCEDE THIS DETAIL.

2 PIPE RISER CLAMP DETAIL
NOT TO SCALE

CROSSLAND ENGINEERING
Big Firm Results. Small Firm Service.
921 Lewers Street, Honolulu, HI 96822
(808) 462-8441 | info@crosslandeng.com | www.crosslandeng.com

ENGINEER:
THIS WORK WAS PREPARED BY ME OR UNDER MY SUPERVISION AND CONSTRUCTION OF THIS PROJECT WILL BE UNDER MY OBSERVATION.

ANDREW S. CROSSLAND
LICENSED PROFESSIONAL ENGINEER
No. 16028-M
HAWAII U.S.A.

EXPIRES: 4/30/2020

DEVELOPER:
CALIFORNIA INVESTMENT REGIONAL CENTER, LLC

PROJECT OWNER:
HAWAII CITY PLAZA, LP

Hawaii City Plaza
Honolulu, Hawaii
710 Sheridan Street
TMK 2-3-014: Parcels 002, 004, & 011

PERMIT SET

DATE 2019 MARCH 19

PROJECT # 15028-02

SHEET TITLE
PLUMBING DETAILS

SHEET NO.
P-601

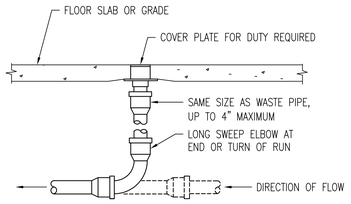

NOTES:

1. LOCATE AT BUILDING EXIT, AT ENDS OF RUNS, AT TURNS OF PIPE GREATER THAN 45°, AT 50' INTERVALS ON STRAIGHT RUNS, AND WHERE SHOWN ON DRAWINGS. LOCATE CLEANOUTS WHERE THERE IS 18" CLEAR AROUND THE CLEANOUT TOP.
2. PROVIDE ROUND, SECURED NICKEL BRONZE ADJUSTABLE TOP WITH "CO" CAST IN COVER. PROVIDE CLEANOUT TOP WITH VARIATIONS SUITABLE FOR FLOOR COVERING (CARPET MARKER, RECESSED FOR TILE, SCORIATED FOR UNFINISHED FLOORS). PROVIDE PLASTIC PLUG IN CAST IRON BODY.
3. FOR CLEANOUT TO GRADE, THE CLEANOUT BODY SHALL BE SET IN THE CENTER OF A 6" THICK BY 18" SQUARE CONCRETE PAD.
4. PROVIDE BACKFILL PER ARCHITECTURAL SPECIFICATIONS.
5. CLEAN THE TOP OF EXPOSED FCO AFTER INSTALLATION.
6. IF FLOOR CLEANOUT IS SUBJECT TO VEHICULAR TRAFFIC, CONTRACTOR SHALL SUPPORT CLEANOUT COVER INDEPENDENTLY OF PIPING.

5 CLEANOUT DETAIL
NOT TO SCALE

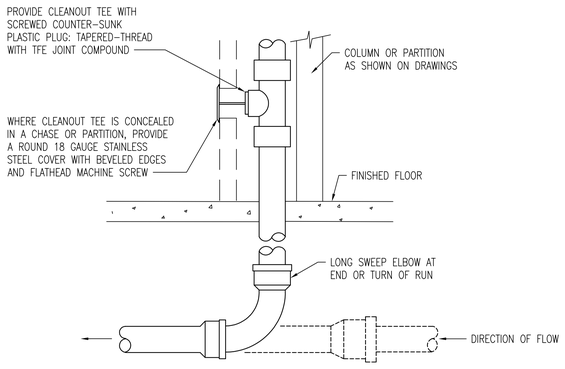

NOTES:

1. PROVIDE WALL CLEANOUT WHERE SHOWN ON DRAWINGS.
2. CLANOUT FACE SHALL BE WITHIN 4" OF WALL SURFACE. PROVIDE PIPE EXTENSION IF REQUIRED.

6 WALL CLEANOUT DETAIL
NOT TO SCALE

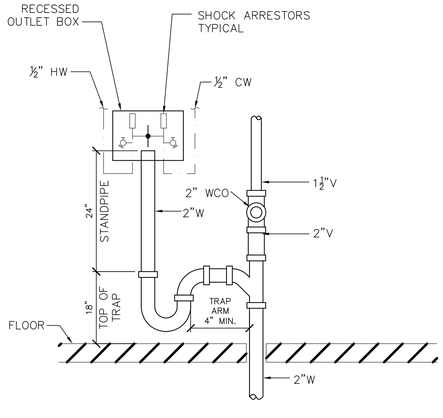

NOTES:

1. SEE PLANS FOR LOCATION OF WASHER BOX AND WASTE PIPE STACK

7 CLOTHES WASHER CONNECTION DETAIL
NOT TO SCALE

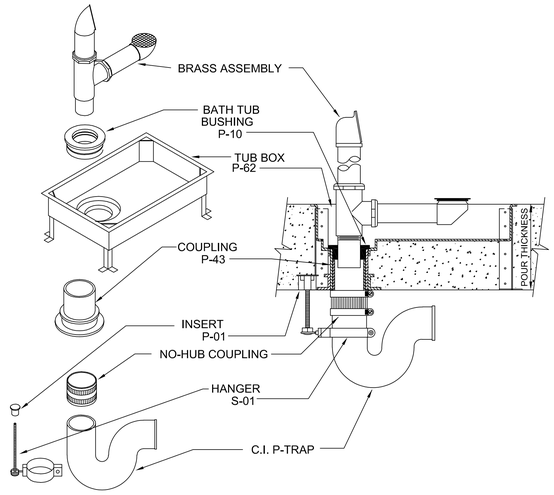

NOTES:

1. INSERT THE PROPER HEIGHT SNAP-IN SUPPORT LEGS & SOLVENT CEMENT THE COUPLING INTO THE OPENINGS INTO THE SOCKET IN THE TUB BOX.
2. USE NAILS THROUGH THE LEG & FLANGE HOLES TO MOUNT BOX TO DECK.
3. SET P-01 CONCRETE INSERT ABUTTING AGAINST THE MOUNTING FLANGE.
4. INSTALL THE CAST IRON P-TRAP TO THE LINER USING A NO-HUB COUPLING & INSTALL THE S-01 HANGER TO THE P-TRAP IN A SECURE MANNER.
5. REMOVE STYROFOAM FROM TUB BOX, KNOCK OUT TEST PLUG & INSERT EITHER A C25661 TUB BUSHING FOR A PIPE SIZE OR C25662 TUBE SIZE W & O.

3 TUB BOX ASSEMBLY DETAIL
NOT TO SCALE

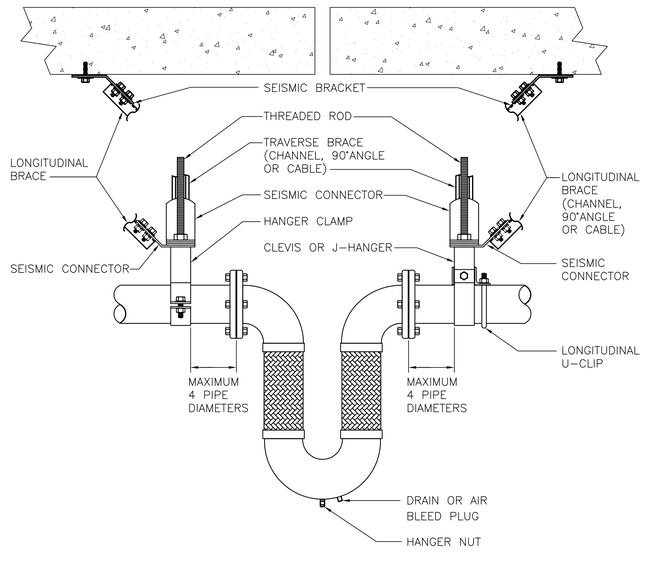

NOTES:

1. SEE SPECIFICATIONS AND FOLLOW MANUFACTURER INSTALLATION INSTRUCTIONS
2. SEISMIC BRACING SHALL NOT PASS THROUGH BUILDING SEISMIC ANR/OR EXPANSION AND CONTRACTION JOINTS. SEISMIC BRACING SHALL NOT CONNECT OR TIE TOGETHER DIFFERENT SIDES OR PARTS OF THE BUILDING STRUCTURE.
3. LOOPS INSTALLED IN ANY ORIENTATION OTHER THAN HANGING DOWN MUST HAVE THE 180° RETURN SUPPORTED.
4. FLEXIBLE SEISMIC LOOP CONSISTS OF AN INNER CORRUGATED STAINLESS STEEL METAL HOSE WITHIN OUTER STAINLESS STEEL BRAID.
5. MOVEMENT CAPABILITIES OF ASSEMBLY (IN ALL THREE PLANES) SHALL BE CONFIRMED WITH STRUCTURAL ENGINEER.

4 BUILDING EXPANSION JOINT SEISMIC FLEXIBLE LOOP DETAIL
NOT TO SCALE

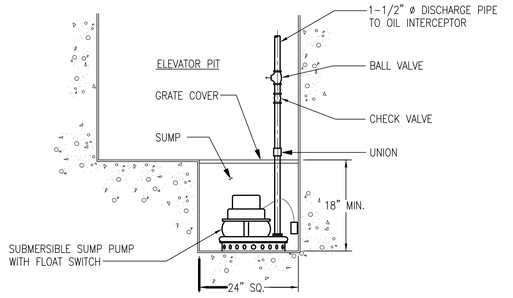

NOTES:

1. SEE SPECIFICATIONS FOR SLEEVE, SLEEVE-SEAL, AND ESCUTCHEON REQUIREMENTS.
2. ALL PIPE PENETRATIONS THROUGH FIRE-RATED WALL ASSEMBLIES SHALL BE PROTECTED BY AN APPROVED THROUGH-PENETRATION FIRESTOP SYSTEM IN ACCORDANCE WITH 2006 IBC AND WITH RATINGS AS DETERMINED BY ASTM E 814 OR UL 1479.
3. WHERE CONFLICT OCCURS, THE ASSEMBLY REQUIREMENTS OF ASTM E 814, UL 1479, AND/OR THE APPROPRIATE UL SYSTEM SHALL SUPERCEDE THIS DETAIL.

1 ELEVATOR SUMP PUMP DETAIL
NOT TO SCALE

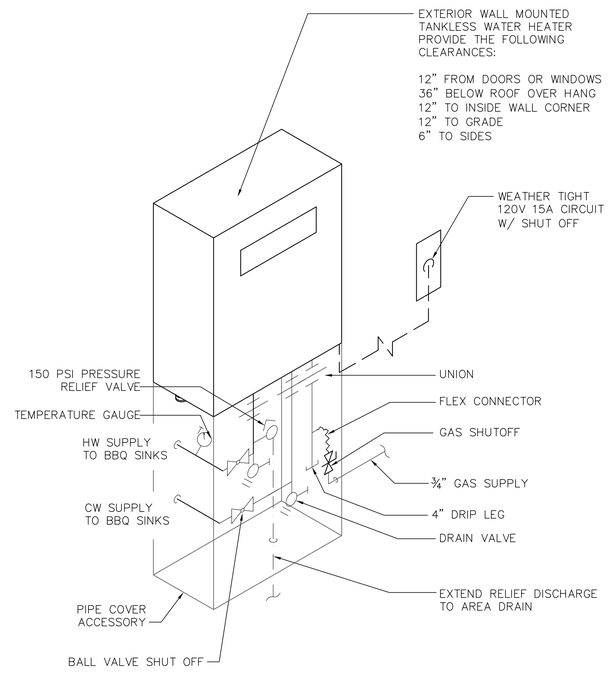

NOTES:

1. SEE MANUFACTURER INSTALLATION INSTRUCTIONS FOR ADDITIONAL INFORMATION.

2 OUTDOOR CONDENSING TANKLESS GAS WATER HEATER DETAIL
NOT TO SCALE

CROSSLAND ENGINEERING
Big Firm Results. Small Firm Service.
[illegible] Lewers Street, Honolulu, HI 96815
(808) 462-8646 | info@crosslandeng.com | www.crosslandeng.com

ENGINEER:
THIS WORK WAS PREPARED BY ME OR UNDER MY SUPERVISION AND CONSTRUCTION OF THIS PROJECT WILL BE UNDER MY OBSERVATION.

ANDREW S. CROSSLAND
LICENSED PROFESSIONAL ENGINEER
No. 16028-M
HAWAII, U.S.A.

EXPIRES: 4/30/2020

DEVELOPER:
CALIFORNIA INVESTMENT REGIONAL CENTER, LLC

PROJECT OWNER:
HAWAII CITY PLAZA, LP

Hawaii City Plaza
Honolulu, Hawaii
710 Sheridan Street
TMK 2-3-014: Parcels 002, 004, & 011

PERMIT SET

DATE 2019 MARCH 19

PROJECT # 15028-02

SHEET TITLE
P-602 PLUMBING DETAILS - P-601

SHEET NO.

NOTES:

1. ALL GREASE INTERCEPTORS SHALL BE LISTED WITH IAPMO (INTERNATIONAL ASSOCIATION OF PLUMBING AND MECHANICAL OFFICIALS) AND BEAR A STAMP SHOWING SUCH CERTIFICATION.
2. THE GREASE INTERCEPTOR SIZE (GALLON LIQUID CAPACITY) MUST BE APPROVED BY CITY & COUNTY OF HONOLULU PRIOR TO INSTALLATION.
3. 100% OF THE INTERIOR OF THE INTERCEPTOR SHALL BE COATED WITH AN ACID–RESISTANT COATING (APPROVED BY WWRD) INCLUDING THE RING AND COVER.
4. 100% OF THE EXTERIOR OF THE INTERCEPTOR SUSCEPTIBLE TO GROUND WATER INTRUSIONS SHALL BE COATED WITH WATER RESISTANT MATERIAL.
5. GREASE INTERCEPTORS SHALL BE CONSTRUCTED WITH MANHOLES OVER THE INLET, OUTLET AND BAFFLE WALL CROSSOVER PIPING FOR PURPOSES OF ACCESS, INSPECTION AND CLEANING.
6. INTERCEPTOR AND SAMPLE BOX RISERS SHALL BE SEALED WITH A RAMNECK TYPE SEALANT PRODUCT AND ALL JOINTS GROUTED TO RING AND COVER.
7. INTERCEPTORS AND COVERS MUST MEET VEHICLE LOADING REQUIREMENTS (H20) PER IAPMO STANDARDS IF THE INTERCEPTOR IS LOCATED IN A POTENTIAL VEHICLE TRAFFIC AREA.
8. SAMPLE BOXES AND COVERS MUST MEET VEHICLE LOADING REQUIREMENTS (H20) IF LOCATED IN A POTENTIAL VEHICLE TRAFFIC AREA.
9. THE INTERCEPTOR SHALL BE VENTED AT THE INLET AND OUTLET OF THE TANK.
10. MANHOLE COVERS SHALL BE GAS TIGHT IN CONSTRUCTION AND HAVE A MINIMUM SIZE OPENING OF 24".
11. THE SAMPLE BOX SHALL BE CONSTRUCTED OF CONCRETE WITH MINIMUM DIMENSIONS OF 12" X 18" AND INCLUDE A 6" FLOW THROUGH CHANNEL FOR TAKING SAMPLES. THE BOX SHAPE MAY BE CIRCULAR (WITH MANHOLE COVER) OR RECTANGULAR.
12. 100% OF THE INTERIOR OF THE SAMPLE BOX SHALL BE COATED WITH ACID–RESISTANT MATERIAL APPROVED BY WWRD.
13. 100% OF THE EXTERIOR OF THE SAMPLE BOX SUSCEPTIBLE TO GROUND WATER INTRUSIONS SHALL BE COATED WITH WATER RESISTANT MATERIAL.
14. THE DISCHARGE REDUCER ON THE SAMPLE BOX SHALL BE ECCENTRIC SO AS NOT TO IMPEDE FLOW THROUGH THE CHANNEL.
15. ANY FIXTURE CONNECTED TO AN INTERCEPTOR SHALL HAVE A NON–REMOVABLE, SECURED PERFORATED METAL FOOD SCREEN, NO LARGER THAN 1/8" EYE HOLE SIZE.
16. INSPECTION OF INSTALLED INTERCEPTORS AND PIPING PRIOR TO BACKFILLING IS REQUIRED. PIPING SHALL MEET THE REQUIREMENTS OF THE UNIFORM PLUMBING CODE.
17. FINAL INSPECTION OF INSTALLED INTERCEPTORS, SAMPLE BOX AND PIPING IS REQUIRED UPON COMPLETION OF WORK. FINAL INSPECTION IS REQUIRED PRIOR TO CERTIFICATE OF OCCUPANCY
18. CONTRACTOR SHALL SUBMIT AS–BUILT DRAWINGS TO CITY & COUNTY OF HONOLULU AT COMPLETION OF WORK. AS–BUILTS ARE REQUIRED PRIOR TO FINAL APPROVAL AND CERTIFICATE OF OCCUPANCY SIGN–OFF.
19. COORDINATE THE EXACT BACKFILL AND CRUSHED ROCK USED TO MOUNT GREASE INTERCEPTOR ON WITH THE GEOTECH ENGINEER TO AVOID SETTLING OF THE UNIT.

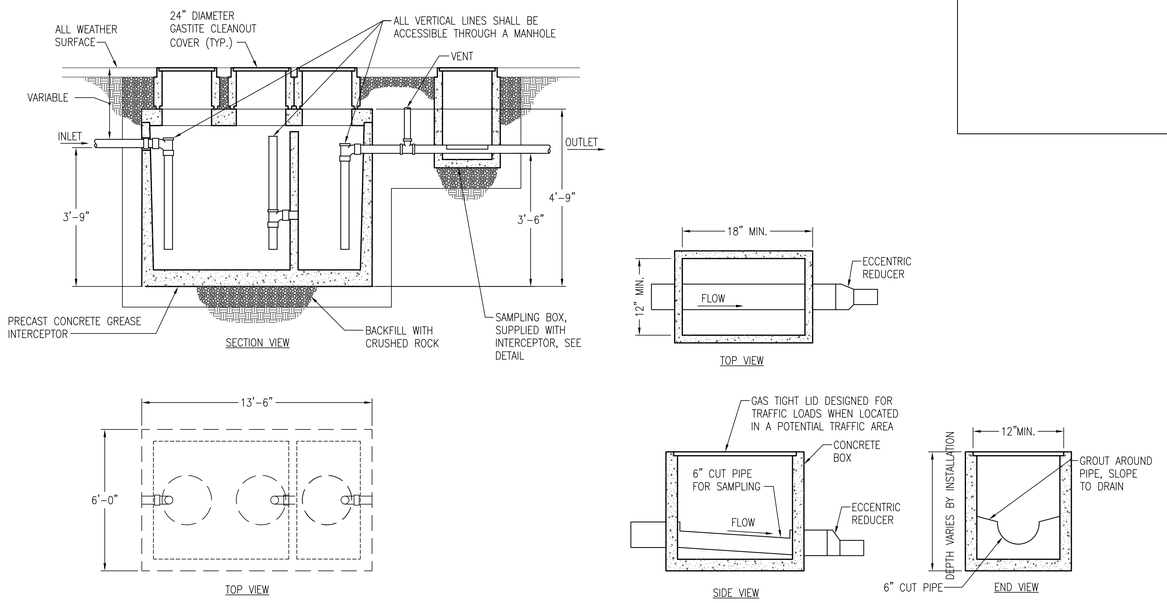

SAMPLE BOX STANDARD

1 GREASE INTERCEPTOR AND SAMPLING BOX DETAIL

NOT TO SCALE

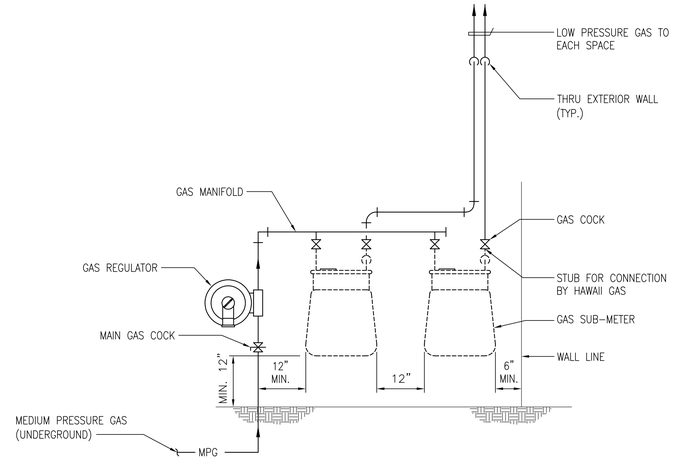

NOTES:

1. LOCATE GAS METER MIN. 12" FROM WALL.
2. MIN. 36" IN FRONT OF METER CLEARANCE FOR MAINTENANCE.
3. REFER TO PLANS FOR EXACT QUANTITY OF GAS SUB–METERS.
4. PROVIDE SEISMIC BRACING AND SHUT–OFF VALVE, REFER TO SPECS FOR ADDITIONAL DETAILS.
5. CONFIRM ALL INSTALLATION REQUIREMENTS WITH HAWAII GAS COMPANNY.

2 GAS SUBMETER BANK DETAIL

NOT TO SCALE

CROSSLAND ENGINEERING
Big Firm Results. Small Firm Service.

ENGINEER:

THIS WORK WAS PREPARED BY ME OR UNDER MY SUPERVISION AND CONSTRUCTION OF THIS PROJECT WILL BE UNDER MY OBSERVATION.

ANDREW S. CROSSLAND LICENSED PROFESSIONAL ENGINEER No. 16028–M HAWAII U.S.A.

EXPIRES: 4/30/2020

DEVELOPER:
CALIFORNIA INVESTMENT REGIONAL CENTER, LLC

PROJECT OWNER:
HAWAII CITY PLAZA, LP

Hawaii City Plaza
Honolulu, Hawaii
710 Sheridan Street
TMK 2-3-014: Parcels 002, 004, & 011

PERMIT SET

DATE 2019 MARCH 19

PROJECT # 15028-02

SHEET TITLE
PLUMBING DETAILS

SHEET NO.
P-603

FIRE PROTECTION LEGEND

SYMBOL	ABBREV.	DESCRIPTION
FIRE PROTECTION SYMBOLS		
		SEMI-RECESSED PENDENT SPRINKLER HEAD
		CONCEALED PENDENT SPRINKLER HEAD
		UPRIGHT SPRINKLER HEAD
		SEMI-RECESSED DRY PENDENT SPRINKLER HEAD
		SEMI-RECESSED SIDEWALL SPRINKLER HEAD
		CONCEALED SIDEWALL SPRINKLER HEAD
FS	FS	FLOW SWITCH
TS	TS	TAMPER SWITCH
FE	FE	FIRE EXTINGUISHER
HD	HD	HEAT DETECTOR
SD	SD	SMOKE DETECTOR
FIRE PROTECTION PIPING		
FM	FM	FIRE MAIN PIPE
FS	FS	FIRE SPRINKLER PIPE
WSP	WSP	WET STANDPIPE
CSP	CSP	COMBINATION STANDPIPE
FDC	FDC	FIRE DEPARTMENT CONNECTION PIPE
D	D	DRAIN PIPE
GENERAL PIPING SYMBOLS AND VALVES		
		PIPE BRANCH TAKE-OFF FROM BOTTOM
		PIPE BRANCH TAKE-OFF FROM TOP
		PIPE DROP
		PIPE RISE
		DIRECTION OF FLOW
	SOV	SHUTOFF VALVE (SEE SPECS FOR TYPE)
		BALANCING VALVE
		2-WAY CONTROL VALVE
		MOTOR OPERATED VALVE
	PRV	PRESSURE REDUCING VALVE
		CHECK VALVE
		WYE STRAINER WITH DRAIN VALVE
		PIPE UNION
		PIPE FLANGE
		FLEXIBLE PIPE CONNECTION
	DCBP	DOUBLE CHECK BACKFLOW PREVENTER
		PRESSURE RELIEF VALVE
	T&P	TEMPERATURE AND PRESSURE RELIEF VALVE
	PT	PRESSURE AND TEMPERATURE TEST PORT
		TEMPERATURE GAUGE AND PRESSURE GAUGE
TAGS		
A / B		EQUIPMENT TAG A – EQUIPMENT TYPE B – NUMBER
A		KEYNOTE TAG KEYNOTE NUMBER "A"
A / B		DETAIL TAG DETAIL "A" ON SHEET "B"

CITY AND COUNTY OF HONOLULU
REVISED ORDINANCE CHAPTER 32,
HONOLULU COUNTY CODE 1990, AS AMENDED

To the best of my knowledge, this projects design substantially conforms to the Building Energy Conservation Code for:

_____ Building Component Systems
_____ Electrical Component Systems
__X__ Mechanical Component Systems

Signature: [signature] Date: 3/19/2019
Name: ANDREW S. CROSSLAND
Title: OWNER, PRINCIPAL MECHANICAL ENGINEER
License No: 16028-M

FIRE SPRINKLER NOTES

PROVIDE A COMPLETE AUTOMATIC FIRE SPRINKLER SYSTEM CONFORMING TO 2012 NFPA 1. THE SYSTEM SHALL BE INSTALLED AND MAINTAINED IN FULL OPERATING CONDITION FOR THE OCCUPANCIES SPECIFIED IN 2012 NFPA 1 OR IN THE REFERENCED PUBLICATIONS LISTED IN CHAPTER 2 OF 2012 NFPA 1. THE SYSTEM INSTALLATION SHALL BE IN ACCORDANCE WITH 2010 NFPA 13, AS APPLICABLE. AUTOMATIC SPRINKLER SYSTEMS INSTALLED TO MAKE USE OF AN ALTERNATIVE PERMITTED BY 2012 NFPA 1 SHALL BE CONSIDERED REQUIRED SYSTEMS AND SHALL MEET THE PROVISIONS OF 2012 NFPA 1 THAT APPLY TO THOSE REQUIRED SYSTEMS.

STRUCTURES UNDERGOING CONSTRUCTION, ALTERATION, OR DEMOLITION OPERATIONS SHALL COMPLY WITH 2009 NFPA 241 AND 2012 NFPA 1, CHAPTER 16. WHERE THE BUILDING IS PROTECTED BY EXISTING FIRE PROTECTION SYSTEMS, SUCH SYSTEMS SHALL BE MAINTAINED OPERATIONAL AT ALL TIMES DURING ALTERATION AND SHALL COMPLY WITH 2012 NFPA 1, SECTIONS 1.3.6.2 AND 10.3.2. WHERE ALTERATION REQUIRES MODIFICATION OF A PORTION OF THE FIRE PROTECTION SYSTEM, THE REMAINDER OF THE SYSTEM SHALL BE KEPT IN SERVICE AND THE FIRE DEPARTMENT SHALL BE NOTIFIED. WHEN IT IS NECESSARY TO SHUT DOWN THE SYSTEM, THE AUTHORITY HAVING JURISDICTION SHALL HAVE THE AUTHORITY TO REQUIRE ALTERNATE MEASURES OF PROTECTION UNTIL THE SYSTEM IS RETURNED TO SERVICE.

AS NECESSARY DURING EMERGENCIES, MAINTENANCE, DRILLS, PRESCRIBED TESTING, ALTERATIONS, OR RENOVATIONS, PORTABLE OR FIXED FIRE-EXTINGUISHING SYSTEMS OR DEVICES OR ANY FIRE-WARNING SYSTEM SHALL BE PERMITTED TO BE MADE INOPERATIVE OR INACCESSIBLE. 2012 NFPA 1, SECTION 10.8.1.1.

A FIRE WATCH SHALL BE REQUIRED AS SPECIFIED IN SECTIONS 1.7.16, 13.3.3.6.5.2(4), 13.7.1.4.4, 16.5.4, 20.2.4.6, 25.1.8, 34.5.4.3, 34.6.3.3, 41.2.2.6, 41.2.2.7, 41.2.4, 41.3.5, AND 41.4.1 AT NO COST TO THE AUTHORITY HAVING JURISDICTION. 2012 NFPA 1, AS AMENDED.

THESE SCHEMATIC FIRE PUMP PLANS ARE SUBMITTED FOR CONDITIONAL APPROVAL OF THE FIRE AND BUILDING DEPARTMENTS AND DIRECT BUSINESS CONNECTIONS, INC. FOR INSURANCE REPORTING. TWO (2) SETS OF COMPLETE WORKING PLANS AND HYDRAULIC CALCULATIONS (IF NECESSARY), STAMPED AND SIGNED BY A HAWAII LICENSED AND REGISTERED MECHANICAL OR FIRE PROTECTION ENGINEER (THE ENGINEER OF RECORD), SHALL BE SUBMITTED, AS APPLICABLE, BY THE CONTRACTOR TO THE FIRE PROTECTION SPECIAL INSPECTOR (FPSI) FOR CODE COMPLIANCE REVIEW. ONE (1) SET WITH THE FPSI APPROVAL STAMP SHALL BE SUBMITTED BY THE CONTRACTOR TO THE DPP BUILDING DIVISION ALONG WITH THE FPSI FINAL REPORT/LETTER PRIOR TO CLOSING OF THE BUILDING PERMIT.

FORMAL INSPECTIONS, AS REQUIRED, SHALL BE WITNESSED BY THE AUTHORITY HAVING JURISDICTION. THE FPSI SHALL BE PROVIDED BY THE GENERAL CONTRACTOR.

1. BUILDING NAME: HAWAII CITY PLAZA

   TAX MAP KEY: 2-3-014: 002, 004, 011

2. OCCUPANCY HAZARD AND SPRINKLER FLOW DATA:

   LIGHT HAZARD: DWELLING UNITS, OFFICES, AND PUBLIC AREAS
   1,500 SQ. FT. DESIGN AREA @ 0.10 GPM PER SQ. FT. DENSITY
   + 100 GPM HOSE

   ORDINARY HAZARD, GROUP 1: PARKING GARAGE, MECH & ELEC ROOMS, BUILDING SERVICE AREAS, RESTAURANT SERVICE AREAS
   1,500 SQ. FT. DESIGN AREA @ 0.15 GPM PER SQ. FT. DENSITY
   + 250 GPM HOSE

3. SITE WATER PRESSURE:
   IF THE SITE WATER PRESSURE IS NOT AVAILABLE OR NEEDS TO BE TESTED TO CONFIRM HONOLULU BOARD OF WATER SUPPLY VALUES, THE CONTRACTOR SHALL PERFORM THE TEST AS PART OF THE SCOPE OF THE PROJECT.

4. STANDPIPE REQUIREMENTS:
   ALL HOSE END VALVES WITH PRESSURES EXCEEDING 175 PSI SHALL BE PRESSURE REDUCING TYPE.

5. FIRE SPRINKLER HEAD LOCATIONS:

   a. FOR ARCHITECTURAL FINISHED CEILING AREAS, SPRINKLER HEAD LOCATIONS SHALL BE SYMMETRICAL AND IN-LINE WITH EACH OTHER AND LIGHT FIXTURES.
   b. FOR TILED CEILING AREAS, SPRINKLERS SHALL BE IN THE CENTER OF 2x2 TILES AND AND SHALL BE EITHER IN THE CENTER OR AT THE QUARTER POINTS OF 2x4 TILES.
   f. ALL FIRE SPRINKLER HEADS LOCATED IN EXTERIOR LOCATIONS OR IN NATURALLY VENTILATED AREAS EXPOSED TO THE OUTSIDE ENVIRONMENT SHALL HAVE FACTORY CORROSION COATING ON THE FIRE SPRINKLER HEAD.
   g. FINAL APPROVAL OF THE CONTRACTOR'S PROPOSED FIRE SPRINKLER HEAD LOCATIONS ARE SUBJECT TO THE ARCHITECT AND ENGINEER'S REVIEW.

6. FIRE SPRINKLER HEAD TYPES:

   a. ALL FIRE SPRINKLER HEADS SHALL BE QUICK RESPONSE FACTORY MUTUAL APPROVED HEADS AND 155°F TEMPERATURE RATING UNLESS OTHERWISE NOTED ON THE DRAWINGS.
   b. ALL FIRE SPRINKLER HEADS IN COMMON AREAS SHALL HAVE K-FACTOR = 5.6. FIRE SPRINKLER HEADS IN RESIDENTIAL DWELLING UNITS SHALL HAVE K-FACTOR AS APPROPRIATE FOR THEIR APPLICATION AND SPRAY COVERAGE.
   c. FINISHED CEILING AREAS: CHROME PLATED RECESSED PENDENT TYPE.
   d. AREAS WITHOUT CEILINGS: BRASS UPRIGHT TYPE.
   e. SIDEWALL LOCATIONS: CHROME PLATED RECESSED SIDE WALL TYPE.

7. SPARE FIRE SPRINKLER HEADS:
   A SUPPLY OF SPARE SPRINKLERS (NEVER FEWER THAN SIX) SHALL BE MAINTAINED ON THE PREMISES SO THAT ANY SPRINKLERS THAT HAVE OPERATED OR BEEN DAMAGED IN ANY WAY CAN BE PROMPTLY REPLACED. THE SPRINKLERS SHALL BE KEPT IN A CABINET LOCATED WHERE THE TEMPERATURE IN WHICH THEY ARE SUBJECTED WILL AT NO TIME EXCEED 100°F. THE STOCK OF SPARE SPRINKLERS SHALL INCLUDE ALL TYPES AND RATINGS INSTALLED IN A LOCATION APPROVED BY THE FIRE CHIEF AND SHALL BE AS FOLLOWS:

   a. 1-300 SPRINKLERS 06 HEADS
   b. 301-1,000 SPRINKLERS 12 HEADS
   c. OVER 1,000 SPRINKLERS 24 HEADS

   IN ADDITION, THREE SPRINKLER STOPPERS AND A SPECIAL SPRINKLER WRENCH SHALL BE PROVIDED AND KEPT IN THE CABINET TO BE USED IN THE REMOVAL AND INSTALLATION OF SPRINKLER HEADS. ONE SPRINKLER WRENCH SHALL BE PROVIDED FOR EACH TYPE OF SPRINKLER HEAD INSTALLED.

8. ELECTRICAL ROOMS:
   ONLY FIRE SPRINKLER PIPING THAT SERVES FIRE SPRINKLER HEADS WITHIN THAT ELECTRICAL ROOM SHALL BE ALLOWED TO BE INSTALLED WITHIN ELECTRICAL ROOMS.

9. FIRE DEPARTMENT CONNECTION REQUIREMENTS (2012 NFPA 1, AS AMENDED):
   13.1.4.2 FIRE DEPARTMENT HOSE CONNECTIONS SERVING STANDPIPE AND SPRINKLER SYSTEMS SHALL BE LOCATED WITHIN 20 FEET OF A FIRE APPARATUS ACCESS ROAD, NOT LESS THAN 18 INCHES AND NOT MORE THAN 4 FEET ABOVE GRADE, OR AS APPROVED BY THE AHJ. APPROPRIATE IDENTIFICATION SIGNS SHALL BE PROVIDED AS REQUIRED BY THE AHJ.

10. INSTALLATION ACCEPTANCE TESTING (2012 NFPA 1, AS AMENDED):
    13.1.1 THE AHJ SHALL HAVE THE AUTHORITY TO REQUIRE THAT CONSTRUCTION DOCUMENTS FOR ALL FIRE PROTECTION SYSTEMS BE SUBMITTED FOR REVIEW AND APPROVAL AND A PERMIT BE ISSUED PRIOR TO THE INSTALLATION, REHABILITATION OR MODIFICATION. FURTHER, THE AHJ SHALL HAVE THE AUTHORITY TO REQUIRE THAT FULL ACCEPTANCE TESTS OF THE SYSTEMS BE PERFORMED IN THE AHJ'S PRESENCE PRIOR TO FINAL SYSTEM CERTIFICATION. FIRE ALARM SYSTEMS; FIRE HYDRANT SYSTEMS; FIRE-EXTINGUISHING SYSTEMS; STANDPIPES; AND OTHER FIRE-PROTECTION SYSTEMS AND APPURTENANCES REQUIRED BY THIS CODE SHALL BE APPROVED BY THE AHJ AS TO INSTALLATION AND LOCATION AND SHALL BE SUBJECT TO ACCEPTANCE TESTS REQUIRED BY THE APPROPRIATE COUNTY AGENCY. A COPY OF A SYSTEM'S UNSATISFACTORY INSPECTION AND MAINTENANCE TEST REPORT SHALL BE SUBMITTED TO THE AHJ BY THE TESTING COMPANY WITHIN FIVE (5) WORKING DAYS AFTER THE COMPLETION OF THE TEST.

GENERAL NOTES

CODES, STANDARDS, AND AUTHORITIES:

A. ALL WORK SHALL COMPLY WITH ALL APPLICABLE STATE, COUNTY, AND MUNICIPAL CODES, AND ALL LOCAL CODES AND ORDINANCES. WHERE PROVISIONS OF PERTINENT CODES AND STANDARDS CONFLICT WITH THE CONTRACT DOCUMENTS, THE MORE STRINGENT PROVISIONS SHALL GOVERN.
B. BEFORE COMMENCING WORK, THE CONTRACTOR SHALL FILE ALL REQUIRED CERTIFICATES OF INSURANCE WITH THE BUILDING DEPARTMENT, OBTAIN ALL REQUIRED PERMITS, AND PAY ALL FEES REQUIRED BY GOVERNING LOCAL AGENCIES AND AUTHORITIES HAVING JURISDICTION.
C. THE GENERAL CONTRACTOR SHALL BE RESPONSIBLE FOR COORDINATING ALL APPLICABLE CODE INSPECTIONS AS REQUIRED BY THE AUTHORITIES HAVING JURISDICTION TO OBTAIN THE BUILDING PERMIT.
D. ALL CONTRACTORS SHALL BE QUALIFIED AND LICENSED FOR WORK THEY PERFORM.

QUALITY ASSURANCE AND GUARANTEE:

A. ALL INSTALLED PRODUCTS, MATERIALS AND EQUIPMENT SHALL BE NEW AND IN PERFECT CONDITION. WORKMANSHIP SHALL BE THE BEST STANDARD PRACTICE OF TRADE.
B. THE CONTRACTOR SHALL FURNISH WRITTEN, CERTIFIED GUARANTEE, IN ACCEPTABLE FORM, TO THE OWNER AGAINST DEFECTIVE WORKMANSHIP, PRODUCTS, MATERIALS, AND EQUIPMENT. FURTHER GUARANTEE TO ADJUST ENTIRE SYSTEM, OR ANY PART THEREOF, AS REQUIRED FOR PERFECT OPERATION FOR A PERIOD OF ONE YEAR AFTER BENEFICIAL USE OR ACCEPTANCE OF OWNER, WHICHEVER IS FIRST. REPAIR, REPLACE, AND MAKE SATISFACTORILY OPERATIVE ALL DEFECTIVE ITEMS AND WORK HOLDING OWNER FREE FROM COST AND LIABILITY IN CONNECTION THEREWITH, FOR THE TERM OF THE GUARANTEE.

CONTRACTOR BID:

A. THE CONTRACTOR'S BID SHALL BE BASED ON ALL WORK SHOWN ON THE PLANS AND AS SPECIFIED IN THE CONTRACT DOCUMENTS. IT IS THE CONTRACTOR'S RESPONSIBILITY TO VISIT THE SITE AND BE FULLY FAMILIAR WITH FIELD CONDITIONS PRIOR TO SUBMITTING BID.
B. CONFLICTS AND/OR PROBLEMS SHALL BE REPORTED PRIOR TO BIDDING FOR RESOLUTION. FAILURE TO REPORT THESE CONFLICTS PLACES THE RESPONSIBILITY ON THE CONTRACTOR TO COMPLETE THE WORK AT THE REASONABLE DIRECTION OF OWNER AND CONSULTANTS, AT NO ADDITIONAL COST TO THE OWNER.

CONGRUENCE:

A. REFER TO DRAWINGS AND SPECIFICATIONS OF ALL TRADES FOR ADDITIONAL GENERAL NOTES, ABBREVIATIONS, AND SYMBOLS LEGENDS. ALL NOTES ARE TO BE REVIEWED AND APPLIED TO RELATED BUILDING COMPONENTS.
B. NOTES APPEAR ON VARIOUS SHEETS FOR DIFFERENT SYSTEMS, PRODUCTS, MATERIALS, AND EQUIPMENT. ALL SHEETS ARE TO BE REVIEWED AND NOTES ON ANY SHEET ARE TO BE APPLIED TO RELATED SYSTEMS, PRODUCTS, MATERIALS, AND EQUIPMENT DEPICTED ON OTHER DRAWINGS.

COORDINATION:

A. THE CONTRACTOR SHALL COORDINATE ALL WORK PROCEDURES AND NECESSARY SPECIAL INSPECTIONS WITH REQUIREMENTS OF LOCAL AUTHORITIES, THE OWNER, AND BUILDING MANAGEMENT.
B. THESE DRAWINGS ARE DIAGRAMMATIC AND ALL CONTRACTORS MUST CAREFULLY COORDINATE THEIR WORK WITH EACH OTHER, THE GENERAL CONTRACTOR, AND OTHER TRADES. PRIORITY SHALL BE GIVEN IN THE FOLLOWING ORDER: GRAVITY SLOPED PLUMBING PIPING; EQUIPMENT, DUCTWORK, AND CONDUIT; FORCED AND PRESSURE PIPING SUCH AS WATER AND FIRE SPRINKLER PIPING.
C. CAREFULLY CHECK SERVICE CLEARANCE REQUIREMENTS WITH OTHER TRADES TO ENSURE THAT ALL PRODUCTS, MATERIALS, AND EQUIPMENT CAN BE INSTALLED IN THE SPACES ALLOTTED THERETO.
D. TRANSMIT TO TRADES DOING WORK OF OTHER SECTIONS ALL INFORMATION REQUIRED FOR THE WORK TO BE PROVIDED UNDER THEIR RESPECTIVE SECTIONS IN AMPLE TIME FOR INSTALLATION.
E. WHEREVER ANY CONTRACTOR'S WORK INTERCONNECTS WITH THE WORK OF OTHER CONTRACTORS, THOSE CONTRACTORS SHALL COORDINATE THEIR WORK TO ENSURE THAT ALL CONTRACTORS HAVE THE INFORMATION NECESSARY TO PROPERLY INSTALL ALL CONNECTIONS.
F. WHILE THE DRAWINGS SHALL BE ADHERED TO AS CLOSELY AS POSSIBLE, THE CONTRACTOR MAY VARY THE RUNS OF PIPING, CONDUIT, AND DUCTWORK, AND MAY MAKE OFFSETS WHERE NECESSARY TO ACCOMMODATE CONDITIONS ARISING AT THE SITE. REASONABLE MODIFICATIONS TO SUIT JOB CONDITIONS SHALL NOT CONSTITUTE BASIS FOR REQUESTING OF ADDITIONAL FUNDS FROM THE OWNER.

SUBMITTALS AND SUBSTITUTIONS:

A. THE CONTRACTOR SHALL SUBMIT ELECTRONIC COPIES OF PRODUCT, MATERIAL, AND EQUIPMENT DATA, AND DIMENSIONED SHOP DRAWINGS FOR REVIEW AND APPROVAL BY THE OWNER, BUILDING MANAGEMENT, AND CROSSLAND ENGINEERING PRIOR TO COMMENCING ANY WORK. ALL WORK DONE PRIOR TO APPROVAL SHALL BE SUBJECT TO REPAIR OR REPLACEMENT AT NO COST TO OWNER. SHOP DRAWINGS SHALL BE COORDINATED WITH OTHER TRADES.
B. IF THE CONTRACTOR PROPOSES TO SUBSTITUTE FOR ANY PRODUCTS, MATERIALS, OR EQUIPMENT SPECIFIED IN THE CONTRACT DOCUMENTS, HE SHALL SUBMIT HIS REQUEST FOR CONSIDERATION OF THE OWNER AND CONSULTANTS PRIOR TO BID IN WRITING. SUCH APPROVAL SHALL NOT RELIEVE THE CONTRACTOR FROM COMPLYING WITH THE REQUIREMENTS OF THE DRAWINGS AND SPECIFICATIONS, AND THE CONTRACTOR SHALL BE RESPONSIBLE AT HIS OWN EXPENSE FOR ANY CHANGES RESULTING FROM HIS PROPOSED SUBSTITUTIONS WHICH AFFECT OTHER PARTS OF HIS OWN WORK OR THE WORK OF OTHER CONTRACTORS.

EXECUTION OF WORK:

A. THE CONTRACTOR SHALL BE RESPONSIBLE FOR THE SAFETY AND GOOD CONDITION OF ALL PRODUCTS, MATERIALS, AND EQUIPMENT OF THE ENTIRE INSTALLATION UNTIL FINAL ACCEPTANCE BY THE OWNER. HE SHALL ERECT AND MAINTAIN SUITABLE BARRIERS, PROTECTIVE DEVICES, LIGHTS OR WARNING SIGNS, WHERE REQUIRED, FOR THE PROTECTION OF THE PUBLIC AND EMPLOYEES IN THE BUILDING AND SHALL BE FULLY RESPONSIBLE FOR ANY LOSS OR INJURY TO PERSONS OR PROPERTIES RESULTING FROM HIS NEGLECT OF THESE PRECAUTIONS, HIS OWN CARELESSNESS, OR THE CARELESSNESS OF HIS EMPLOYEES.
B. MINOR DETAILS NOT USUALLY SHOWN OR SPECIFIED, BUT NECESSARY FOR PROPER CONSTRUCTION OF ANY PART OF THE WORK SHALL BE INCLUDED AS IF THEY WERE INDICATED IN THE CONTRACT DOCUMENTS.
C. THE CONTRACTOR SHALL DO ALL CUTTING, PATCHING, AND REPAIRING AS REQUIRED TO PERFORM ALL OF THE WORK INDICATED ON THE DRAWINGS, AND ALL OTHER RELATED WORK THAT MAY BE REQUIRED TO COMPLETE THE JOB.

DOCUMENT OWNERSHIP:

A. CROSSLAND ENGINEERING SHALL RETAIN TITLE, OWNERSHIP, AND COPYRIGHT OF THE MECHANICAL CONSTRUCTION DOCUMENTS AS INSTRUMENTS OF SERVICE.
B. THE GENERAL CONTRACTOR OR THEIR SUBCONTRACTORS SHALL NOT USE CROSSLAND ENGINEERING'S CONSTRUCTION DOCUMENTS TO SATISFY THEIR OBLIGATION TO PREPARE AND SUBMIT SHOP DRAWINGS OR RECORD DRAWINGS AS REQUIRED BY THE CONTRACT.

RECORD DRAWINGS:

A. THE CONTRACTOR SHALL MAINTAIN A SET OF CONTRACT DRAWINGS AT THE JOB SITE, MARKING THEM TO SHOW VARIATIONS BETWEEN THE CONSTRUCTION DOCUMENTS AND THE ACTUAL INSTALLATION.
B. THE CONTRACTOR SHALL PROVIDE OWNER WITH ACCURATE AND REPRODUCIBLE RECORD DRAWINGS OF THE INSTALLED WORK UPON COMPLETION OF WORK.
C. THE QUALITY OF THE RECORD DRAWINGS SHALL BE AS GOOD AS OR BETTER THAN THE CONTRACT DRAWINGS.

BUILDING CODES

2006 INTERNATIONAL BUILDING CODE W/ AMENDMENTS PER ROH CHAPTER 16
2006 INTERNATIONAL EXISTING BUILDING CODE W/ AMENDMENTS PER ROH CHAPTER 16
2008 NATIONAL ELECTRICAL CODE W/ AMENDMENTS PER ROH CHAPTER 17
2006 UNIFORM PLUMBING CODE W/ AMENDMENTS PER ROH CHAPTER 19
2012 NFPA 1: UNIFORM FIRE CODE W/ AMENDMENTS PER ROH CHAPTER 20
2006 INTERNATIONAL ENERGY CONSERVATION CODE W/ AMENDMENTS PER ROH CHAPTER 32

2004 ADAAG & 2010 ADA STANDARDS FOR ACCESSIBLE DESIGN
CONFORMANCE WITH THE DESIGN AND CONSTRUCTION REQUIREMENTS OF THE AMERICANS WITH DISABILITIES ACT ACCESSIBILITY GUIDELINES ADMINISTERED BY THE DEPARTMENT OF JUSTICE OR THE FAIR HOUSING ACT ACCESSIBILITY GUIDELINES ADMINISTERED BY THE DEPARTMENT OF HOUSING AND URBAN DEVELOPMENT SHALL BE EQUIVALENT TO MEETING THE ACCESSIBILITY OF THIS CODE.

PACKAGED SKID ELECTRIC FIRE PUMP SCHEDULE

				FIRE PUMP					JOCKEY PUMP			ELECTRICAL								
MARK	SERVICE	LOCATION	CONFIGURATION	TOTAL FLOW CAPACITY (GPM)	PUMP HEAD (PSI)	NOMINAL MOTOR SIZE (HP)	MAXIMUM MOTOR SPEED (RPM)	EFFICIENCY (%)	TOTAL FLOW CAPACITY (GPM)	NOMINAL MOTOR SIZE (HP)	MAXIMUM MOTOR SPEED (RPM)	VOLTAGE	PHASE	HERTZ	EMERGENCY POWER (YES/NO)	OPERATING WEIGHT (LBS.)	BASIS-OF-DESIGN MANUFACTURER	BASIS-OF-DESIGN MODEL NO.	LOCAL MANUFACTURER'S REPRESENTATIVE	REMARKS
FP-1	FIRE SPRINKLER	FIRE PUMP ROOM	HORIZONTAL SPLITCASE	1,000	170	150	3,600	75	–	3	3,600	208	3	60	YES	6,500	PEERLESS	5AEF11G	ENGINEERED SYSTEMS	SEE NOTES

NOTES: 1. THE FIRE PUMP SHALL BE PROVIDED AS A PACKAGED SKID SYSTEM IN CONFORMANCE WITH NFPA 20. FIRE PUMP CONTROLLER, JOCKEY PUMP CONTROLLER, AND AUTOMATIC TRANSFER SWITCH SHALL BE MOUNTED TO THE SKID. 2. FIRE PUMP SHALL HAVE FULL SERVICE REDUCED VOLTAGE SOFT START SOFT STOP ELECTRIC FIRE PUMP CONTROLLER WITH AUTOMATIC POWER TRANSFER SWITCH AND INTEGRAL DISCONNECT, EQUAL TO TORNATECH GPS + GPU. 3. JOCKEY PUMP SHALL HAVE ACROSS THE LINE START ELECTRIC JOCKEY PUMP CONTROLLER WITH INTEGRAL DISCONNECT, EQUAL TO TORNATECH JP3. 4. CONTRACTOR SHALL CONFIRM ELECTRICAL POWER POINTS OF CONNECTION WITH ELECTRICAL SUBCONTRACTOR AFTER FIRE PUMP SHOP DRAWINGS ARE OBTAINED FROM THE MANUFACTURER. SINGLE POINT POWER CONNECTION SHALL BE PROVIDED BY THE FACTORY IF POSSIBLE. 5. FIRE PUMP PACKAGE SHALL INCLUDE TEST LOOP WITH VENTURI FLOW METER, TEST HEADER CONNECTION, AND BYPASS LOOP. REFER TO FIRE PUMP DETAIL 5/F-601 FOR MORE INFORMATION REGARDING FIRE PUMP PIPING AND VALVE CONFIGURATION. 6. CONTACT LOCAL MANUFACTURER'S REPRESENTATIVE FOR FIRE PUMP EQUIPMENT SELECTION. 7. PUMP SHALL BE CONNECTED TO STANDBY POWER VIA ON-SITE EMERGENCY GENERATOR. 8. CONTRACTOR SHALL ENGAGE A FACTORY-AUTHORIZED TECHNICIAN TO PERFORM SYSTEM STARTUP, COMMISSIONING, AND PERFORMANCE TESTING. TECHNICIAN SHALL PROVIDE A REPORT TO ENGINEER FOR REVIEW AND APPROVAL.

CROSSLAND ENGINEERING
Big Firm Results. Small Firm Service.
3371 Loulu Street, Honolulu, HI 96822
(808) 462-8484 | info@crosslandeng.com | www.crosslandeng.com

ENGINEER:
THIS WORK WAS PREPARED BY ME OR UNDER MY SUPERVISION AND CONSTRUCTION OF THIS PROJECT WILL BE UNDER MY OBSERVATION.
ANDREW S. CROSSLAND
LICENSED PROFESSIONAL ENGINEER
No. 16028-M
HAWAII U.S.A.
EXPIRES: 4/30/2020

DEVELOPER:
CALIFORNIA INVESTMENT REGIONAL CENTER, LLC

PROJECT OWNER:
HAWAII CITY PLAZA, LP

Hawaii City Plaza
Honolulu, Hawaii
710 Sheridan Street
TMK 2-3-014: Parcels 002, 004, & 011

PERMIT SET

DATE 2019 MARCH 19

PROJECT # 15028-02

SHEET TITLE
FIRE PROTECTION NOTES, LEGEND, AND SCHEDULES

SHEET NO.
F-000

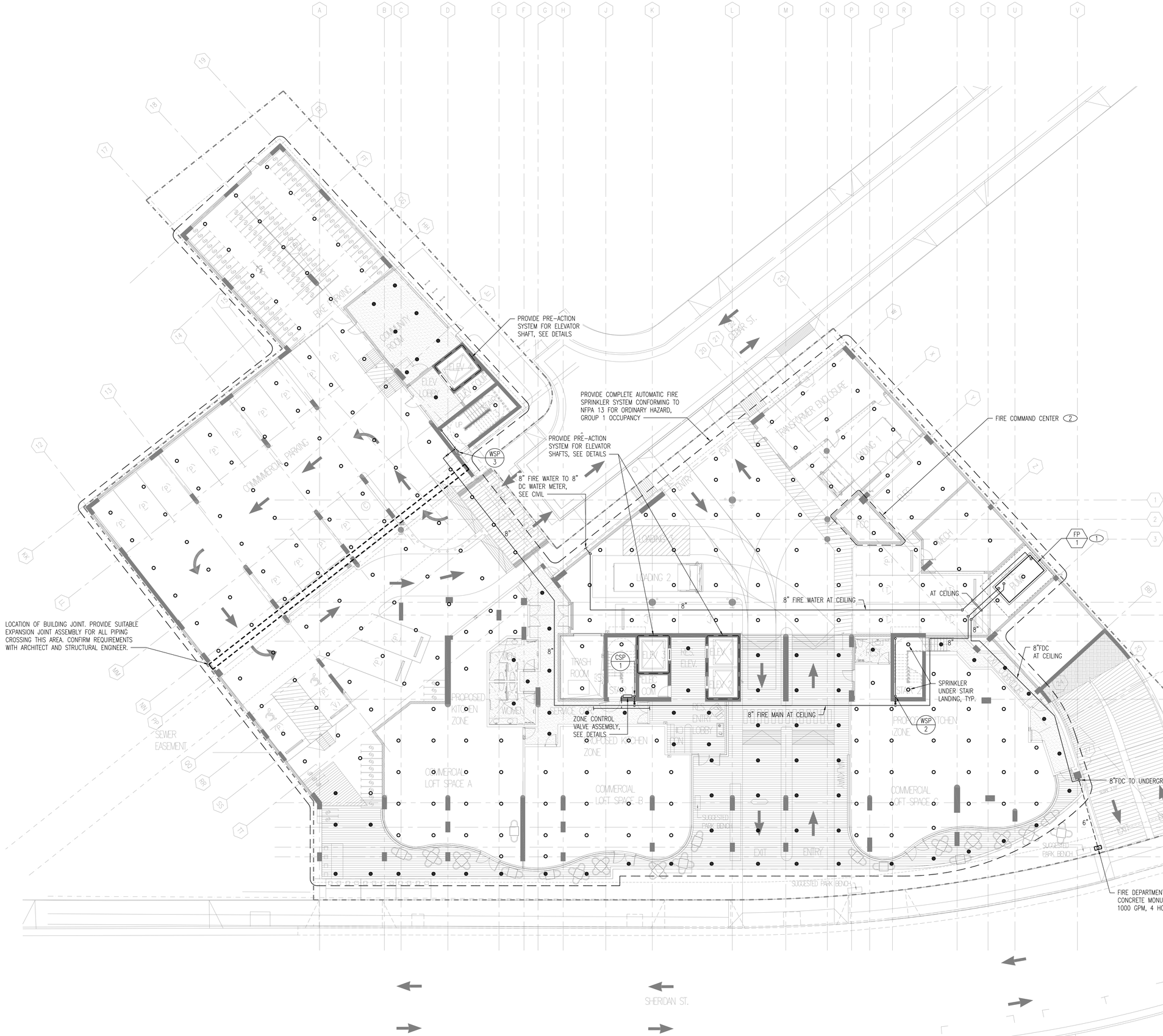

SHEET NOTES

1. REFER TO STANDPIPE RISER DIAGRAMS ON SHEET F-501 FOR STANDPIPE CONFIGURATION WITHIN STAIRWELLS SHOWN ON THIS SHEET.

KEY NOTES

(1) INSTALL NEW PACKAGED SKID ELECTRIC FIRE PUMP PER MANUFACTURER INSTRUCTIONS WITH REQUIRED SERVICE CLEARANCES. EQUIPMENT BASE SHALL BE MOUNTED AND ANCHORED TO A MINIMUM 4" THICK CONCRETE PAD. ANCHORING SYSTEM SHALL BE SUBMITTED AS A DELEGATED-DESIGN, STAMPED BY A HAWAII LICENSED STRUCTURAL ENGINEER. REFER TO DETAIL 5/F-601 FOR MORE INFORMATION REGARDING FIRE PUMP PIPING AND VALVE CONFIGURATION.

(2) A LAYOUT OF THE FIRE COMMAND CENTER AND ALL FEATURES REQUIRED BY SECTION 911 OF IBC 2006 SHALL BE SUBMITTED FOR APPROVAL OF THE FIRE CHIEF PRIOR TO INSTALLATION. THE FIRE COMMAND CENTER SHALL COMPLY WITH NFPA 72 AND SHALL CONTAIN:

1. THE EMERGENCY VOICE/ALARM COMMUNICATION SYSTEM UNIT.
2. THE FIRE DEPARTMENT COMMUNICATIONS UNIT.
3. FIRE DETECTION AND ALARM SYSTEM ANNUNCIATOR UNIT.
4. ANNUNCIATOR UNIT VISUALLY INDICATING THE LOCATION OF THE ELEVATORS AND WHETHER THEY ARE OPERATIONAL.
5. STATUS INDICATORS AND CONTROLS FOR AIR DISTRIBUTION SYSTEMS.
6. THE FIRE FIGHTER'S CONTROL PANEL REQUIRED BY SECTION 909.16 FOR SMOKE CONTROL SYSTEMS INSTALLED IN THE BUILDING.
7. CONTROLS FOR UNLOCKING INTERIOR EXIT STAIRWAY DOORS SIMULTANEOUSLY.
8. SPRINKLER VALVE AND WATER-FLOW DETECTOR DISPLAY PANELS.
9. EMERGENCY AND STANDBY POWER STATUS INDICATORS.
10. A TELEPHONE FOR FIRE DEPARTMENT USE WITH CONTROLLED ACCESS TO THE PUBLIC TELEPHONE SYSTEM.
11. FIRE PUMP STATUS INDICATORS.
12. SCHEMATIC BUILDING PLANS INDICATING THE TYPICAL FLOOR PLAN AND DETAILING THE BUILDING CORE, MEANS OF EGRESS, FIRE PROTECTION SYSTEMS, FIRE-FIGHTING EQUIPMENT AND FIRE DEPARTMENT ACCESS, AND THE LOCATION OF FIRE WALLS, FIRE BARRIERS, FIRE PARTITIONS, SMOKE BARRIERS, AND SMOKE PARTITIONS.
13. AN APPROVED BUILDING INFORMATION CARD.
14. WORKTABLE.
15. GENERATOR SUPERVISION DEVICES, MANUAL START, AND TRANSFER FEATURES.
16. PUBLIC ADDRESS SYSTEM.
17. ELEVATOR FIRE RECALL SWITCH IN ACCORDANCE WITH ASME A17.1.
18. ELEVATOR EMERGENCY OR STANDBY POWER SELECTOR SWITCH(ES).

1 FIRE PROTECTION PLAN - LEVEL 01
SCALE: 3/32" = 1'-0"

8 4 0 8 16

CROSSLAND ENGINEERING
Big Firm Results. Small Firm Service.
87th Lewers Street, Honolulu, HI 96815
(808) 462-8481 | info@crosslandeng.com | www.crosslandeng.com

ENGINEER:
THIS WORK WAS PREPARED BY ME OR UNDER MY SUPERVISION AND CONSTRUCTION OF THIS PROJECT WILL BE UNDER MY OBSERVATION.

ANDREW S. CROSSLAND
LICENSED PROFESSIONAL ENGINEER
No. 16028-M
HAWAII U.S.A.

EXPIRES: 4/30/2020

DEVELOPER:
CALIFORNIA INVESTMENT REGIONAL CENTER, LLC

PROJECT OWNER:
HAWAII CITY PLAZA, LP

Hawaii City Plaza
Honolulu, Hawaii
710 Sheridan Street
TMK 2-3-014: Parcels 002, 004, & 011

PERMIT SET

DATE 2019 MARCH 19

PROJECT # 15028-02

SHEET TITLE
FIRE PROTECTION PLAN - LEVEL 01

SHEET NO.
F-101

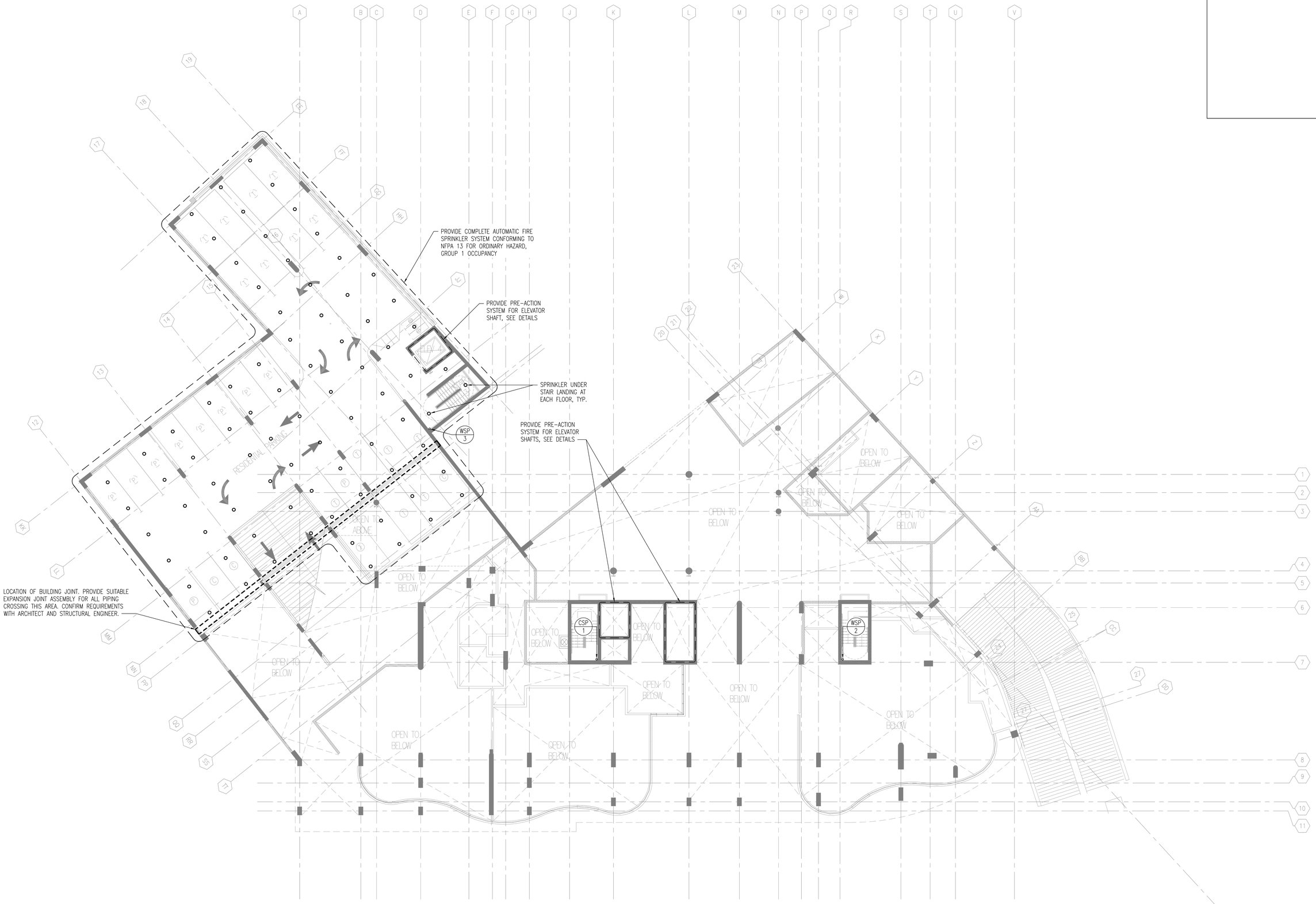

1 FIRE PROTECTION PLAN - LEVEL 01 MEZZ
SCALE: 3/32" = 1'-0"

CROSSLAND ENGINEERING
Big Firm Results. Small Firm Service.
1311 Lusk Street, Honolulu, HI 96813
808.462.8484 | info@crossland.com | www.crossland.com

ENGINEER:
THIS WORK WAS PREPARED BY ME OR UNDER MY SUPERVISION AND CONSTRUCTION OF THIS PROJECT WILL BE UNDER MY OBSERVATION.

ANDREW S. CROSSLAND
LICENSED PROFESSIONAL ENGINEER
No. 16028-M
HAWAII U.S.A.

EXPIRES: 4/30/2020

DEVELOPER:
CALIFORNIA INVESTMENT REGIONAL CENTER, LLC

PROJECT OWNER:
HAWAII CITY PLAZA, LP

Hawaii City Plaza
Honolulu, Hawaii
710 Sheridan Street
TMK 2-3-014: Parcels 002, 004, & 011

PERMIT SET

DATE 2019 MARCH 19

PROJECT # 15028-02

SHEET TITLE
FIRE PROTECTION PLAN - LEVEL 01 MEZZ

SHEET NO.
F-102



1 FIRE PROTECTION PLAN - LEVEL 02
SCALE: 3/32" = 1'-0"

CROSSLAND ENGINEERING
Big Firm Results. Small Firm Service.
1311 Lusu Street, Honolulu, HI 96813
808.482.8484 | info@crossland.eng.com www.crossland.eng.com

ENGINEER:
THIS WORK WAS PREPARED BY ME OR UNDER MY SUPERVISION AND CONSTRUCTION OF THIS PROJECT WILL BE UNDER MY OBSERVATION.

ANDREW S. CROSSLAND
LICENSED PROFESSIONAL ENGINEER
No. 16028-M
HAWAII U.S.A.

EXPIRES: 4/30/2020

DEVELOPER:
CALIFORNIA INVESTMENT REGIONAL CENTER, LLC

PROJECT OWNER:
HAWAII CITY PLAZA, LP

Hawaii City Plaza
Honolulu, Hawaii
710 Sheridan Street
TMK 2-3-014: Parcels 002, 004, & 011

PERMIT SET

DATE 2019 MARCH 19

PROJECT # 15028-02

SHEET TITLE
FIRE PROTECTION PLAN - LEVEL 02

SHEET NO.
F-103



1 FIRE PROTECTION PLAN - LEVEL 03-04
SCALE: 3/32" = 1'-0"

CROSSLAND ENGINEERING
Big Firm Results. Small Firm Service.
1511 Lusu Street, Honolulu, HI 96813
808.482.8484 | info@crosslandeng.com | www.crosslandeng.com

ENGINEER:
THIS WORK WAS PREPARED BY ME OR UNDER MY SUPERVISION AND CONSTRUCTION OF THIS PROJECT WILL BE UNDER MY OBSERVATION.

ANDREW S. CROSSLAND
LICENSED PROFESSIONAL ENGINEER
No. 16028-M
HAWAII U.S.A.

EXPIRES: 4/30/2020

DEVELOPER:
CALIFORNIA INVESTMENT REGIONAL CENTER, LLC

PROJECT OWNER:
HAWAII CITY PLAZA, LP

Hawaii City Plaza
Honolulu, Hawaii
710 Sheridan Street
TMK 2-3-014: Parcels 002, 004, & 011

PERMIT SET

DATE 2019 MARCH 19

PROJECT # 15028-02

SHEET TITLE
FIRE PROTECTION PLAN - LEVEL 03-04

SHEET NO.
F-104



1 FIRE PROTECTION PLAN - LEVEL 05
SCALE: 3/32" = 1'-0"

CROSSLAND ENGINEERING
Big Firm Results. Small Firm Service.
1011 Lewis Street, Honolulu, HI 96822
(808) 462-8484 | info@crossland.org | www.crossland.org

ENGINEER:
THIS WORK WAS PREPARED BY ME OR UNDER MY SUPERVISION AND CONSTRUCTION OF THIS PROJECT WILL BE UNDER MY OBSERVATION.

ANDREW S. CROSSLAND
LICENSED PROFESSIONAL ENGINEER
No. 16028-M
HAWAII U.S.A.

EXPIRES: 4/30/2020

DEVELOPER:
CALIFORNIA INVESTMENT REGIONAL CENTER, LLC

PROJECT OWNER:
HAWAII CITY PLAZA, LP

Hawaii City Plaza
Honolulu, Hawaii
710 Sheridan Street
TMK 2-3-014: Parcels 002, 004, & 011

PERMIT SET

DATE 2019 MARCH 19

PROJECT # 15028-02

SHEET TITLE
FIRE PROTECTION PLAN - LEVEL 05

SHEET NO.
F-105

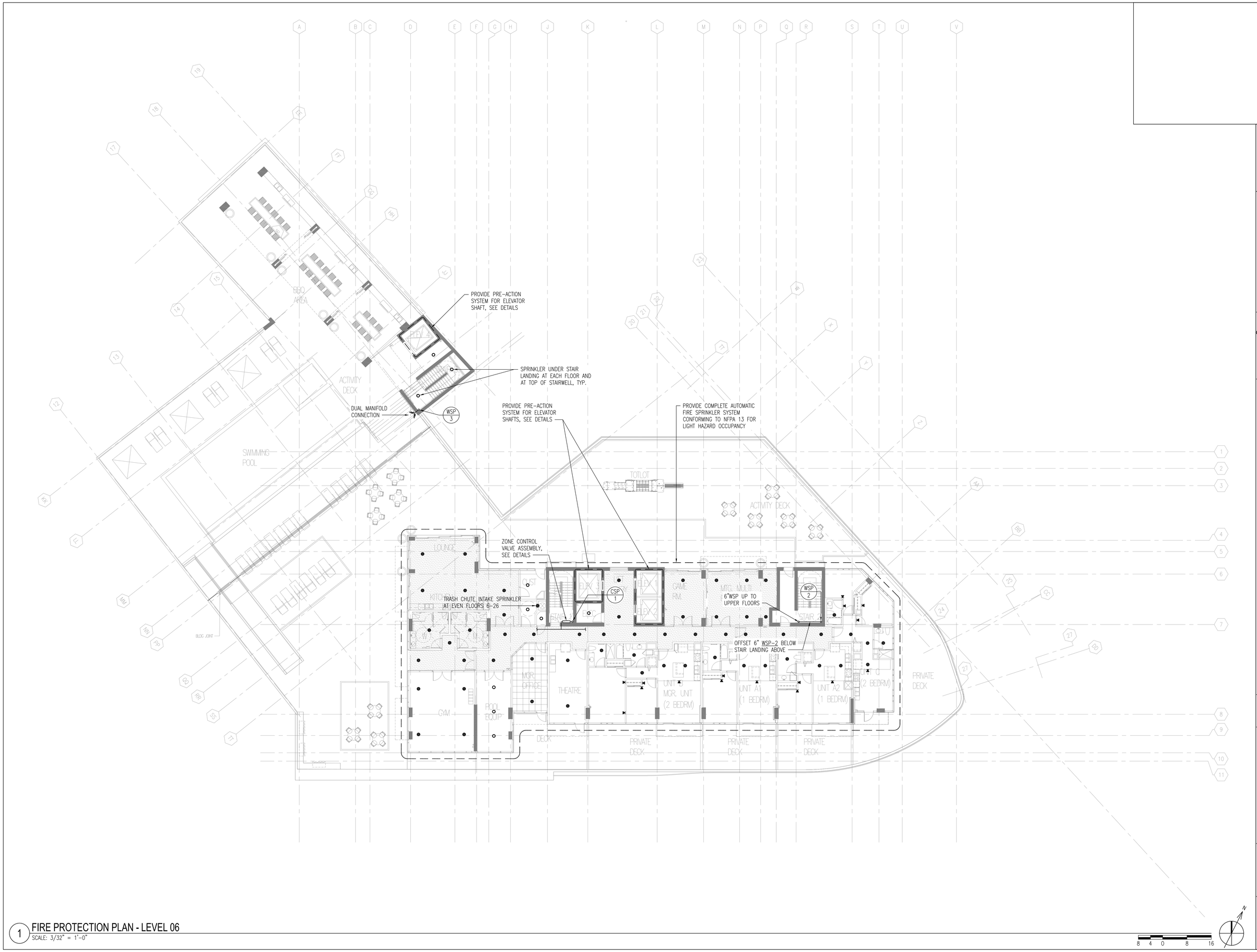

1 FIRE PROTECTION PLAN - LEVEL 06
SCALE: 3/32" = 1'-0"

CROSSLAND ENGINEERING
Big Firm Results. Small Firm Service.
1511 Lusu Street, Honolulu, HI 96813
808.492.8484 | info@crossland-eng.com www.crossland-eng.com

ENGINEER:
THIS WORK WAS PREPARED BY ME OR UNDER MY SUPERVISION AND CONSTRUCTION OF THIS PROJECT WILL BE UNDER MY OBSERVATION.

ANDREW S. CROSSLAND
LICENSED PROFESSIONAL ENGINEER
No. 16028-M
HAWAII U.S.A.

EXPIRES: 4/30/2020

DEVELOPER:
CALIFORNIA INVESTMENT REGIONAL CENTER, LLC

PROJECT OWNER:
HAWAII CITY PLAZA, LP

Hawaii City Plaza
Honolulu, Hawaii
710 Sheridan Street
TMK 2-3-014: Parcels 002, 004, & 011

PERMIT SET

DATE 2019 MARCH 19

PROJECT # 15028-02

SHEET TITLE
FIRE PROTECTION PLAN - LEVEL 06

SHEET NO.
F-106

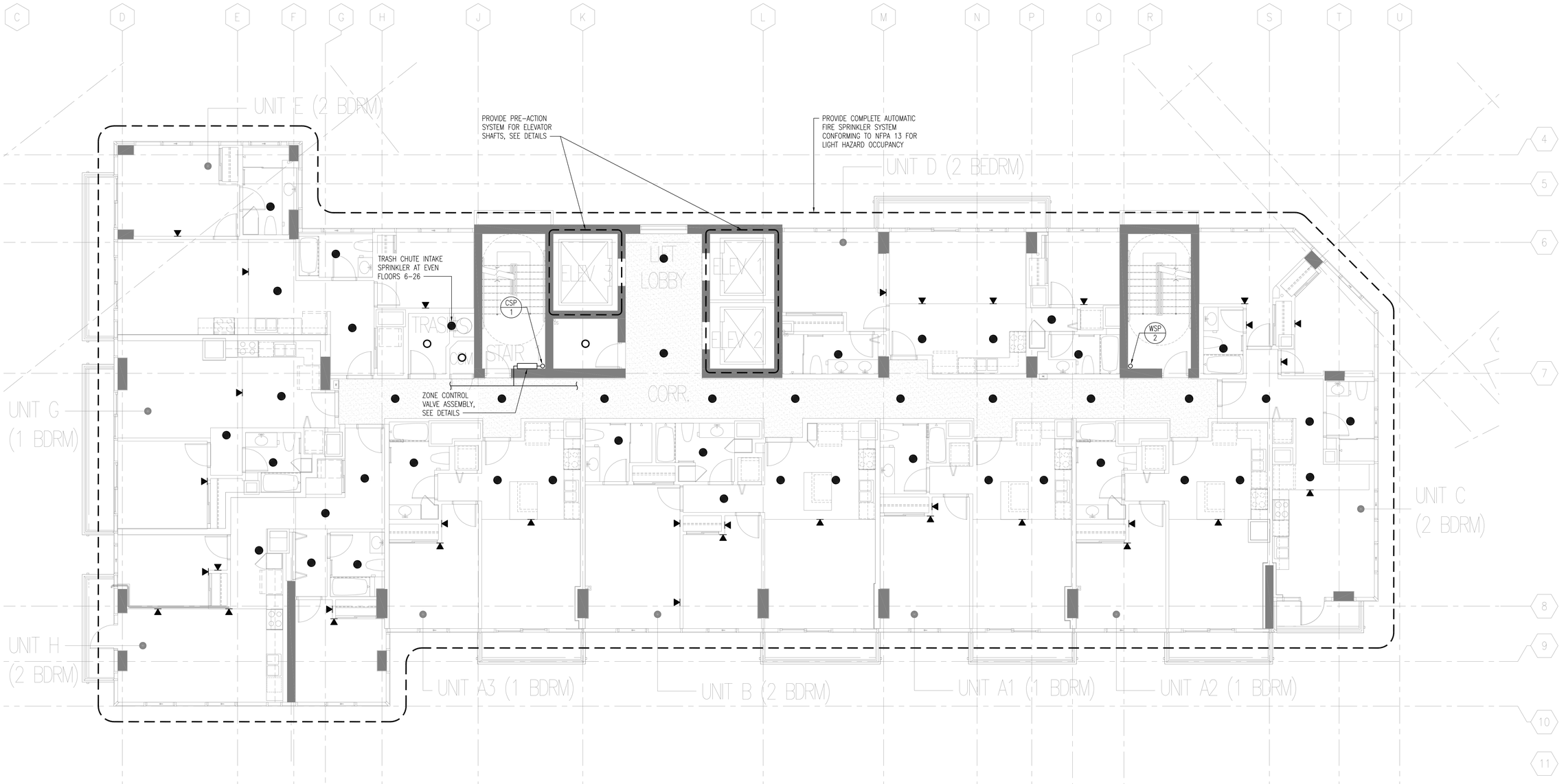

1 FIRE PROTECTION PLAN - LEVEL 07-26
SCALE: 3/16" = 1'-0"

4 2 0 4 8

CROSSLAND ENGINEERING
Big Firm Results. Small Firm Service.
[illegible] 97th Loop, Street, Honolulu, HI 96822
(808) 462-8646 | info@crosslandeng.com | www.crosslandeng.com

ENGINEER:
THIS WORK WAS PREPARED BY ME OR UNDER MY SUPERVISION AND CONSTRUCTION OF THIS PROJECT WILL BE UNDER MY OBSERVATION.

ANDREW S. CROSSLAND
LICENSED PROFESSIONAL ENGINEER
No. 16028-M
HAWAII U.S.A.

EXPIRES: 4/30/2020

DEVELOPER:
CALIFORNIA INVESTMENT REGIONAL CENTER, LLC

PROJECT OWNER:
HAWAII CITY PLAZA, LP

Hawaii City Plaza
Honolulu, Hawaii
710 Sheridan Street
TMK 2-3-014: Parcels 002, 004, & 011

PERMIT SET

DATE 2019 MARCH 19

PROJECT # 15028-02

SHEET TITLE
FIRE PROTECTION PLAN - LEVEL 07-26

SHEET NO.
F-107

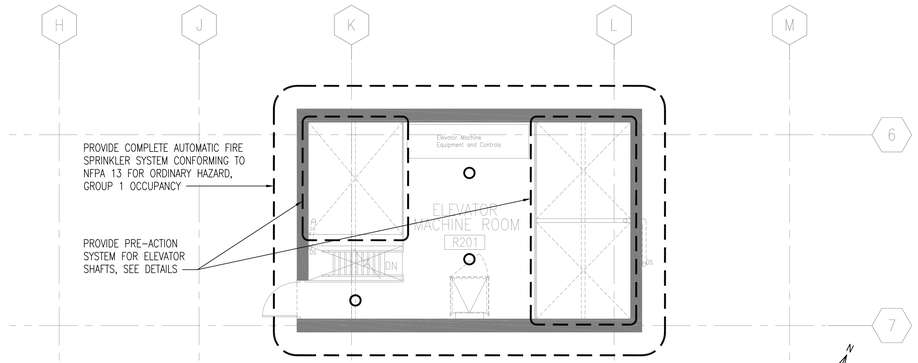

2 FIRE PROTECTION PLAN - ELEVATOR MACHINE ROOM
SCALE: 3/16" = 1'-0"

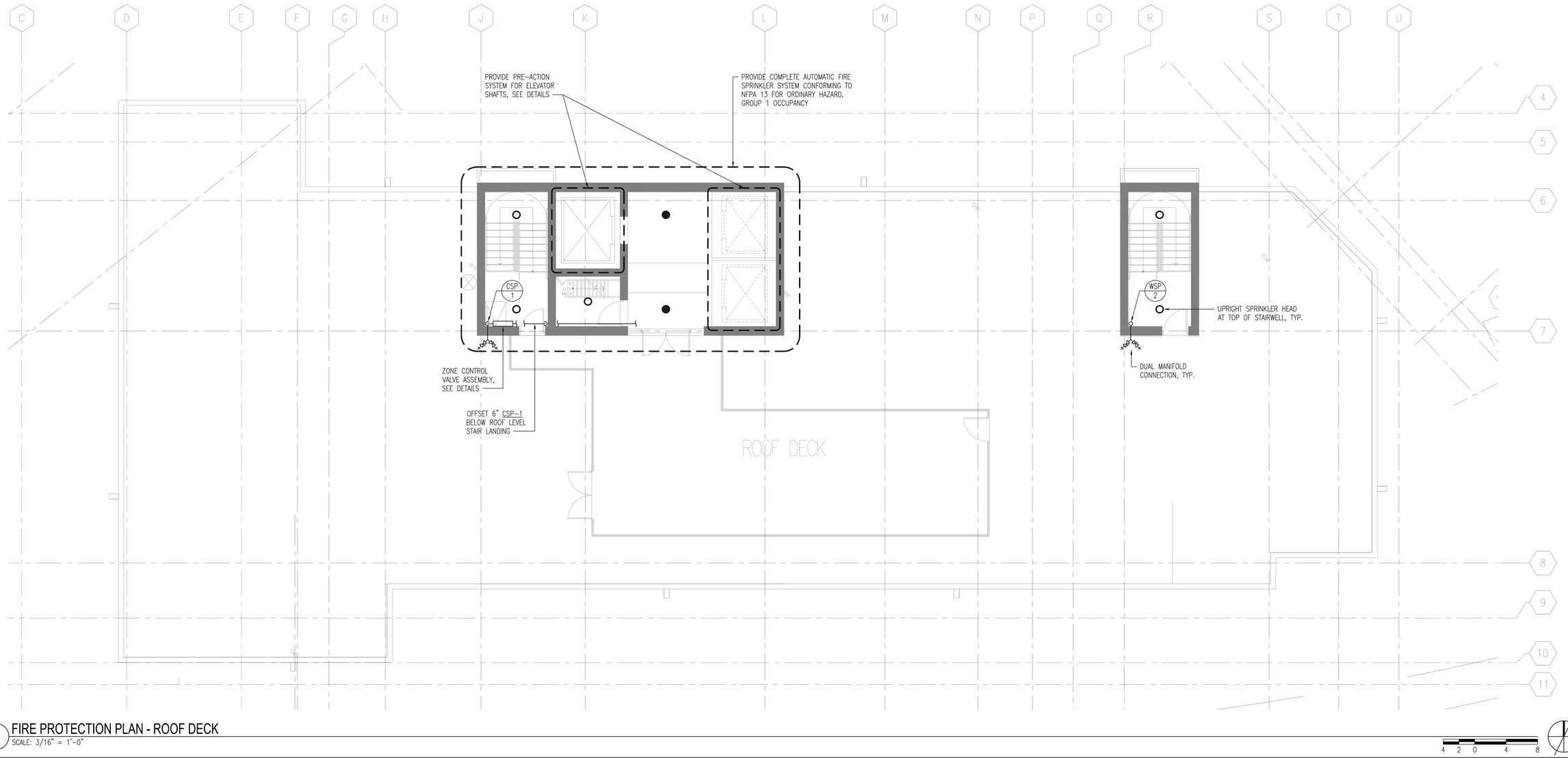

1 FIRE PROTECTION PLAN - ROOF DECK
SCALE: 3/16" = 1'-0"

CROSSLAND ENGINEERING
Big Firm Results. Small Firm Service.
1571 Lusu Street, Honolulu, HI 96813
808.462.8484 | info@crossland-eng.com www.crossland-eng.com

ENGINEER:
THIS WORK WAS PREPARED BY ME OR UNDER MY SUPERVISION AND CONSTRUCTION OF THIS PROJECT WILL BE UNDER MY OBSERVATION.

ANDREW S. CROSSLAND
LICENSED PROFESSIONAL ENGINEER
No. 16028-M
HAWAII U.S.A.

EXPIRES: 4/30/2020

DEVELOPER:
CALIFORNIA INVESTMENT REGIONAL CENTER, LLC

PROJECT OWNER:
HAWAII CITY PLAZA, LP

Hawaii City Plaza
Honolulu, Hawaii
710 Sheridan Street
TMK 2-3-014: Parcels 002, 004, & 011

PERMIT SET

DATE 2019 MARCH 19

PROJECT # 15028-02

SHEET TITLE
FIRE PROTECTION PLAN - ROOF

SHEET NO.
F-108

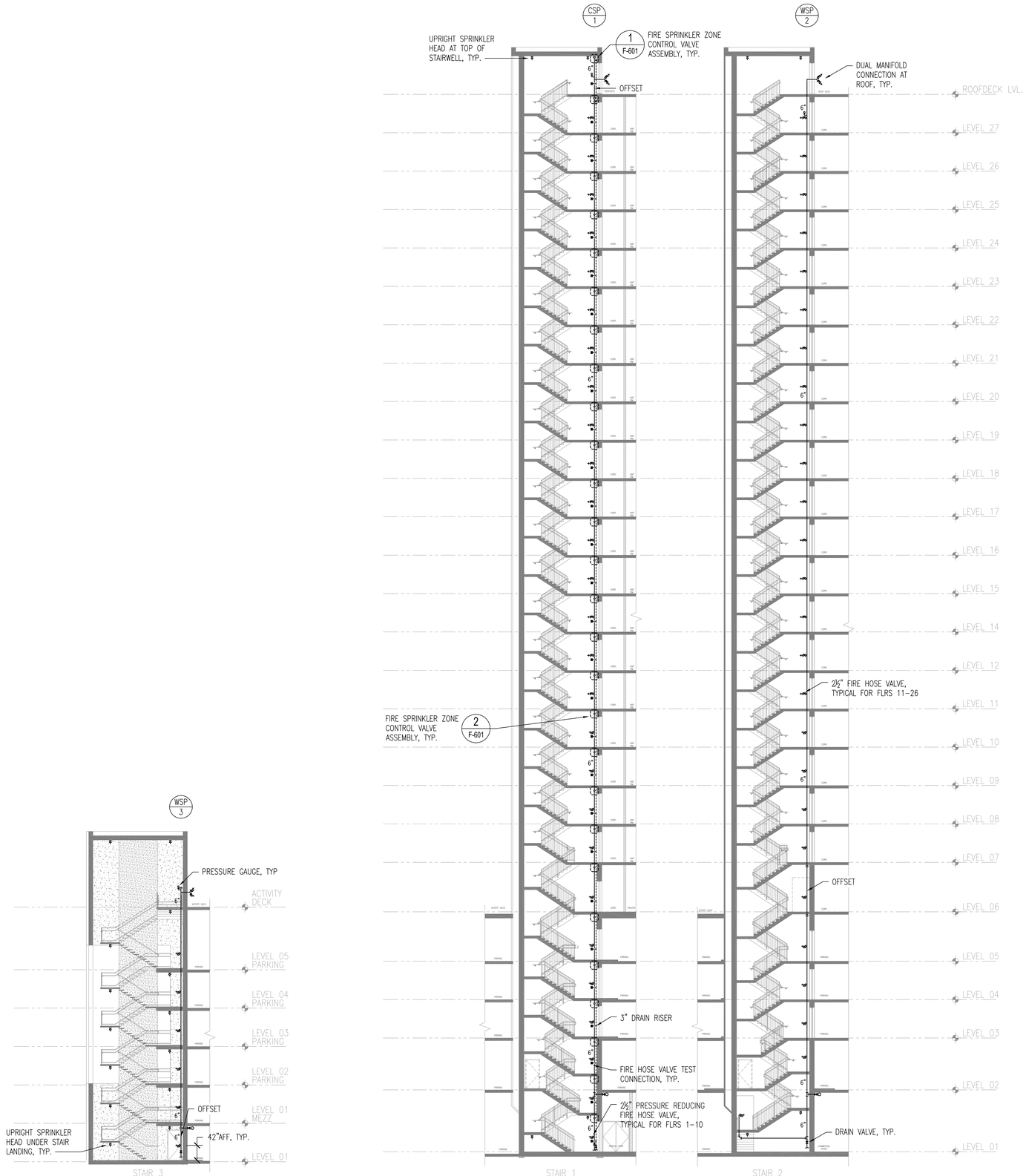

1 STANDPIPE RISER DIAGRAMS
SCALE: NOT TO SCALE

CROSSLAND ENGINEERING
Big Firm Results. Small Firm Service.
1571 Lulu Street, Honolulu, HI 96822
808.462.8484 | info@crossland.com www.crossland.com

ENGINEER:
THIS WORK WAS PREPARED BY ME OR UNDER MY SUPERVISION AND CONSTRUCTION OF THIS PROJECT WILL BE UNDER MY OBSERVATION.

ANDREW S. CROSSLAND
LICENSED PROFESSIONAL ENGINEER
No. 16028-M
HAWAII U.S.A.

EXPIRES: 4/30/2020

DEVELOPER:
CALIFORNIA INVESTMENT REGIONAL CENTER, LLC

PROJECT OWNER:
HAWAII CITY PLAZA, LP

Hawaii City Plaza
Honolulu, Hawaii
710 Sheridan Street
TMK 2-3-014: Parcels 002, 004, & 011

PERMIT SET

DATE 2019 MARCH 19

PROJECT # 15028-02

SHEET TITLE
STANDPIPE RISER DIAGRAMS

SHEET NO.
F-501

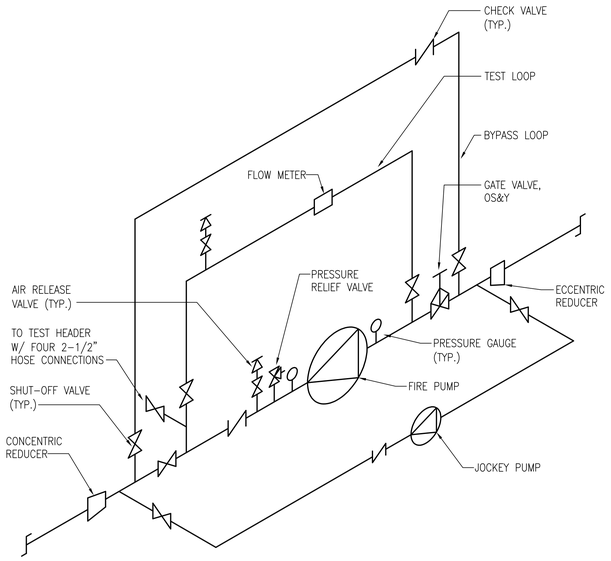

NOTES:

1. PROVIDE TAMPER SWITCHES ON ALL VALVES.
2. ELECTRIC FIRE PUMP CONTROLLER SHALL BE FULL SERVICE REDUCED VOLTAGE SOFT START SOFT STOP WITH AUTOMATIC POWER TRANSFER SWITCH AND INTEGRAL DISCONNECT.
3. ELECTRIC JOCKEY PUMP CONTROLLER SHAL BE ACROSS THE LINE START WITH INTEGRAL DISCONNECT.

5 FIRE PUMP DETAIL
NOT TO SCALE

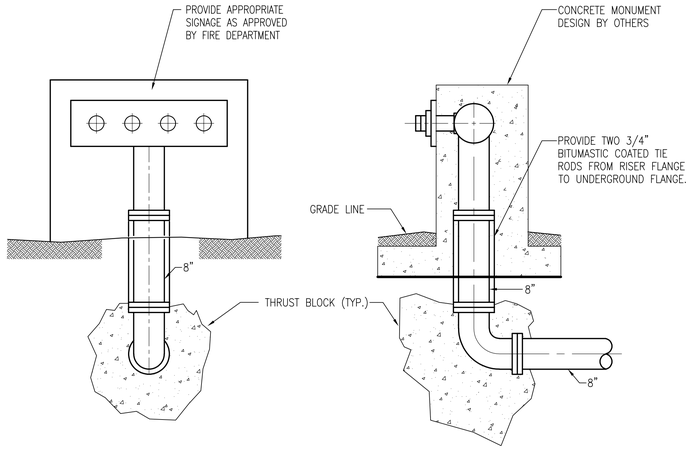

NOTES:

1. FIRE PUMP TEST CONNECTIONS SHALL BE SIMILAR TO FIRE DEPARTMENT CONNECTIONS EXCEPT GATE VALVES SHALL BE PROVIDED AT CONNECTIONS.
2. PROVIDE FULL SWING CHECK VALVE IN FDC PIPE IF NONE IS PROVIDED AT CONNECTION TO FIRE PUMP OR IF FDC ONLY CONNECTS INTO A STANDPIPE SYSTEM.
3. FIRE DEPARTMENT CONNECTIONS SHALL BE LOCATED WITHIN 20' OF FIRE TRUCK ACCESS.

3 FIRE DEPARTMENT CONNECTION DETAIL
NOT TO SCALE

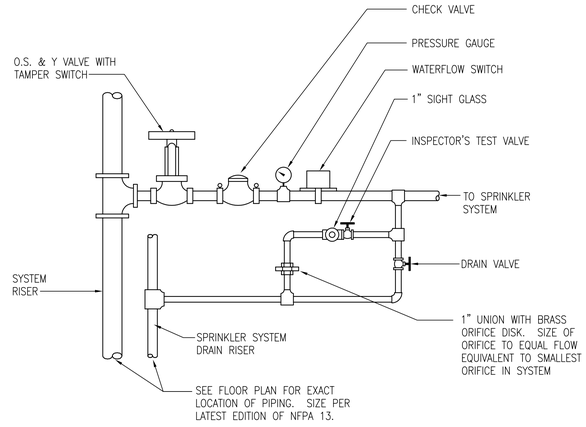

NOTES:

1. INSTALLATION SHALL BE IN ACCORDANCE WITH NFPA 13 AND NFPA 14.
2. SEE STANDPIPE RISER DIAGRAMS FOR ADDITIONAL INFORMATION AND PIPE SIZES.

1 FLOOR/ZONE CONTROL VALVE DETAIL (UNDER 175 PSI)
NOT TO SCALE

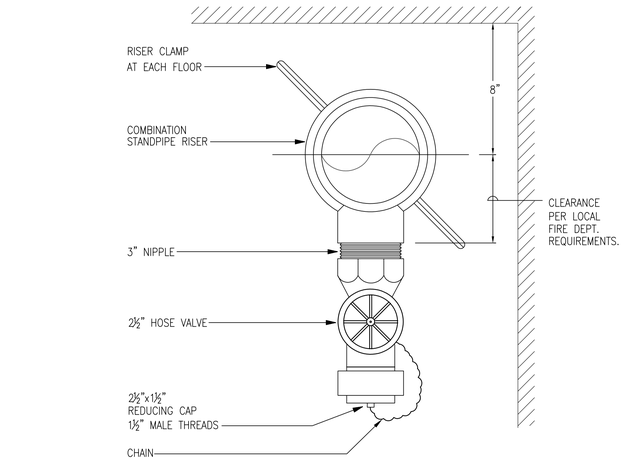

NOTES:

1. MAINTAIN ALL CODE REQUIRED EXIT CLEARANCES IN STAIRWAYS AND EXIT CORRIDORS.
2. PROVIDE PRESSURE REDUCING TYPE VALVE FOR ALL FLOORS EXPOSED TO STANDPIPE WATER PRESSURES EXCEEDING 175 PSI. REFER TO STANDPIPE RISER DETAIL ON F-501 FOR MORE INFORMATION. CONFIRM STANDPIPE PRESSURES AT EACH FLOOR WITH WORKING HYDRAULIC CALCULATIONS AND ADJUST AS NECESSARY IN SHOP DRAWINGS FOR ENGINEER REVIEW AND APPROVAL.

6 FIRE HOSE END VALVE DETAIL
NOT TO SCALE

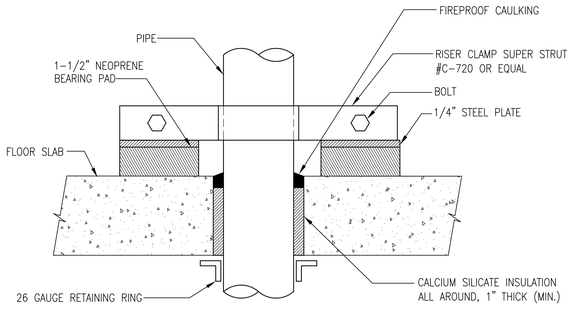

NOTES:

1. SEE SPECIFICATIONS FOR SLEEVE, SLEEVE-SEAL, AND RISER CLAMP REQUIREMENTS.
2. ALL PIPE PENETRATIONS THROUGH FIRE-RATED HORIZONTAL ASSEMBLIES SHALL BE PROTECTED BY AN APPROVED THROUGH-PENETRATION FIRESTOP SYSTEM IN ACCORDANCE WITH 2006 IBC AND WITH RATINGS AS DETERMINED BY ASTM E 814 OR UL 1479.
3. WHERE CONFLICT OCCURS, THE ASSEMBLY REQUIREMENTS OF ASTM E 814, UL 1479, AND/OR THE APPROPRIATE UL SYSTEM SHALL SUPERCEDE THIS DETAIL.

4 PIPE RISER CLAMP DETAIL
NOT TO SCALE

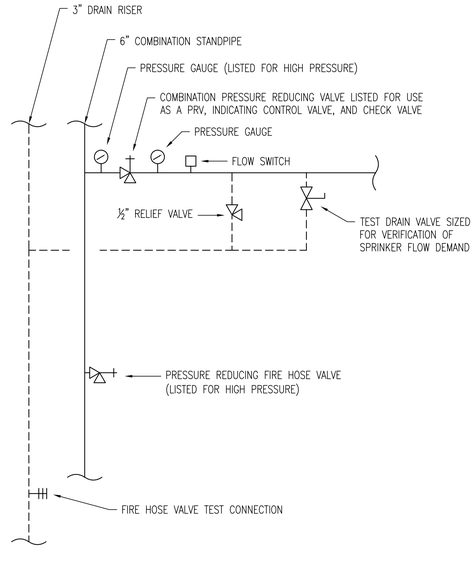

NOTES:

1. INSTALLATION SHALL BE IN ACCORDANCE WITH NFPA 13 AND NFPA 14.
2. SEE STANDPIPE RISER DIAGRAMS FOR ADDITIONAL INFORMATION AND PIPE SIZES.

2 FLOOR/ZONE CONTROL VALVE DETAIL (OVER 175 PSI)
NOT TO SCALE

CROSSLAND ENGINEERING
Big Firm Results. Small Firm Service.
1571 Liona Street, Honolulu, HI 96822
(808) 462-8640 | info@crosslandeng.com | www.crosslandeng.com

ENGINEER:
THIS WORK WAS PREPARED BY ME OR UNDER MY SUPERVISION AND CONSTRUCTION OF THIS PROJECT WILL BE UNDER MY OBSERVATION.

ANDREW S. CROSSLAND
LICENSED PROFESSIONAL ENGINEER
No. 16028-M
HAWAII U.S.A.

EXPIRES: 4/30/2020

DEVELOPER:
CALIFORNIA INVESTMENT REGIONAL CENTER, LLC

PROJECT OWNER:
HAWAII CITY PLAZA, LP

Hawaii City Plaza
Honolulu, Hawaii
710 Sheridan Street
TMK 2-3-014: Parcels 002, 004, & 011

PERMIT SET

DATE 2019 MARCH 19

PROJECT # 15028-02

SHEET TITLE
FIRE PROTECTION DETAILS

SHEET NO.
F-601

ELEVATOR PRE-ACTION CONTROL NOTES:

1. WATER FLOW SWITCH TO SPRINKLER IN ELEVATOR PIT SHALL SHUT-DOWN POWER TO ELEVATOR UPON SENSING WATER FLOW.
2. TAMPER SWITCH FOR VALVE SUPERVISION ON PIPING TO ELEVATOR PIT
3. SOLENOID FLOW CONTROL VALVE FOR PROTECTION OF ELEVATOR MACHINE ROOM. ACTIVATED FROM HEAT DETECTION IN THE MACHINE ROOM. PRIOR TO RELEASING SOLENOID VALVE POWER SHALL BE DISCONNECTED TO ELEVATOR.
4. SOLENOID FLOW CONTROL VALVE FOR PROTECTION OF ELEVATOR SHAFT. ACTIVATED FROM HEAT DETECTION IN THE SHAFT. PRIOR TO RELEASING SOLENOID VALVE, POWER SHALL BE DISCONNECTED TO ELEVATOR.
5. TAMPER SWITCH FOR VALVE SUPERVISION ON PIPING TO ELEVATOR MACHINE ROOM AND TOP OF ELEVATOR SHAFT.
6. PROVIDE SIGNAL BOOSTERS AS REQUIRED FOR LONG WIRING RUNS. COORDINATE WITH ELECTRICAL CONTRACTOR.
7. ALL MODELS AND MAUFACTURERS SHOWN ARE BASIS OF DESIGN, APPROVED EQUALS ARE ACCEPTABLE.

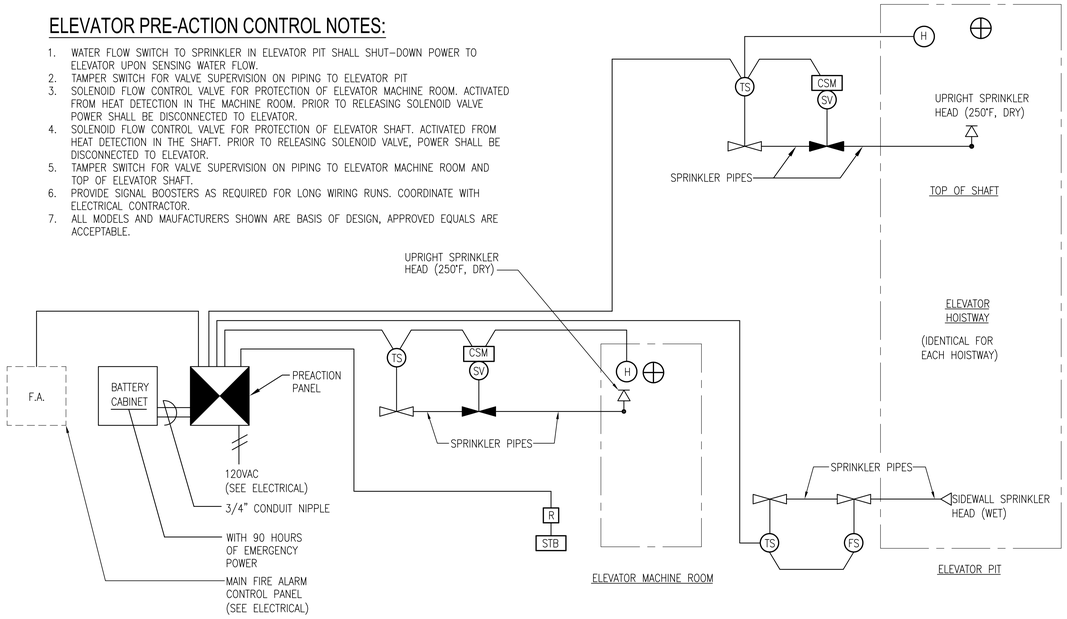

LEGEND

- H — HEAT DETECTOR, 200°F RATE OF RISE; SIMPLEX: 2098-9211 BASE W/ 4098-9410 HEAD
- CSM — COIL SUPERVISION MODULE; SIMPLEX: 2081-9032
- R — INTERFACE RELAY; SIMPLEX: 2088-9008
- PREACTION PANEL (PAP); SIMPLEX: 4120
- SV — AUTOMATIC SPRINKLER SOLENOID VALVE (24VDC); WITH SIMPLEX 2080-9029 DISCONNECT. COMPATIBLE FM APPROVED CONTROL SOLENOID VALVE:
  1. ASCO CAT. No. 8210A107, R8210A107, OR T8210A107 24VDC COIL, 700 mA.
  2. SKINNER CAT. No. LV2LBX25 24VDC COIL, 460 mA.
- WF — AUTOMATIC WATERFLOW SWITCH;
- FS — FLOW SWITCH
- TS — VALVE SUPERVISORY TAMPER SWITCH;
- STB — SHUNT-TRIP BREAKER (ELEVATOR POWER); (SEE ELECTRICAL)
- OPEN SPRINKLER VALVE;
- CLOSED SPRINKLER VALVE;
- FIRE ALARM CONTROL PANEL (SEE ELECTRICAL)
- FIRE ALARM SMOKE DETECTOR (SEE ELECTRICAL)
- WIRING PER MANUFACTURER'S RECOMMENDATIONS

1 FIRE SPRINKLER ELEVATOR PRE-ACTION DETAIL

NOT TO SCALE

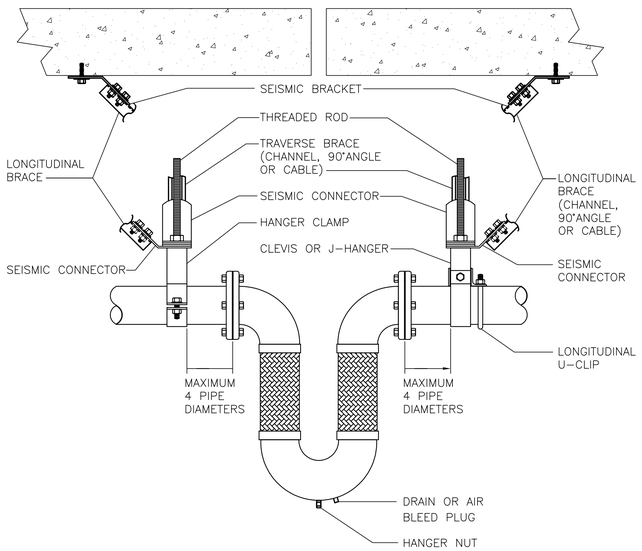

NOTES:

1. SEE SPECIFICATIONS AND FOLLOW MANUFACTURER INSTALLATION INSTRUCTIONS.
2. SEISMIC BRACING SHALL NOT PASS THROUGH BUILDING SEISMIC ANR/OR EXPANSION AND CONTRACTION JOINTS. SEISMIC BRACING SHALL NOT CONNECT OR TIE TOGETHER DIFFERENT SIDES OR PARTS OF THE BUILDING STRUCTURE.
3. LOOPS INSTALLED IN ANY ORIENTATION OTHER THAN HANGING DOWN MUST HAVE THE 180° RETURN SUPPORTED.
4. FLEXIBLE SEISMIC LOOP CONSISTS OF AN INNER CORRUGATED STAINLESS STEEL METAL HOSE WITHIN OUTER STAINLESS STEEL BRAID.
5. MOVEMENT CAPABILITIES OF ASSEMBLY (IN ALL THREE PLANES) SHALL BE CONFIRMED WITH STRUCTURAL ENGINEER.

3 BUILDING EXPANSION JOINT SEISMIC FLEXIBLE LOOP DETAIL

NOT TO SCALE

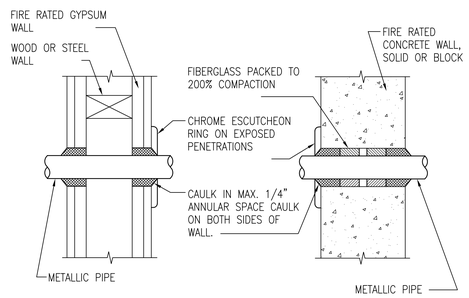

NOTES:

1. SEE SPECIFICATIONS FOR SLEEVE, SLEEVE-SEAL, AND ESCUTCHEON REQUIREMENTS.
2. ALL PIPE PENETRATIONS THROUGH FIRE-RATED WALL ASSEMBLIES SHALL BE PROTECTED BY AN APPROVED THROUGH-PENETRATION FIRESTOP SYSTEM IN ACCORDANCE WITH 2006 IBC AND WITH RATINGS AS DETERMINED BY ASTM E 814 OR UL 1479.
3. WHERE CONFLICT OCCURS, THE ASSEMBLY REQUIREMENTS OF ASTM E 814, UL 1479, AND/OR THE APPROPRIATE UL SYSTEM SHALL SUPERCEDE THIS DETAIL.

2 PIPE THRU FIRE-RATED WALL DETAIL

NOT TO SCALE

CROSSLAND ENGINEERING
Big Firm Results. Small Firm Service.

ENGINEER:

THIS WORK WAS PREPARED BY ME OR UNDER MY SUPERVISION AND CONSTRUCTION OF THIS PROJECT WILL BE UNDER MY OBSERVATION.

ANDREW S. CROSSLAND
LICENSED PROFESSIONAL ENGINEER
No. 16028-M
HAWAII U.S.A.

EXPIRES: 4/30/2020

DEVELOPER:
CALIFORNIA INVESTMENT REGIONAL CENTER, LLC

PROJECT OWNER:
HAWAII CITY PLAZA, LP

Hawaii City Plaza
Honolulu, Hawaii
710 Sheridan Street
TMK 2-3-014: Parcels 002, 004, & 011

PERMIT SET

DATE 2019 MARCH 19

PROJECT # 15028-02

SHEET TITLE
FIRE PROTECTION DETAILS

SHEET NO.
F-602